NO. 43 NOTES FROM THE SHOP $2.50

Woodsmith®

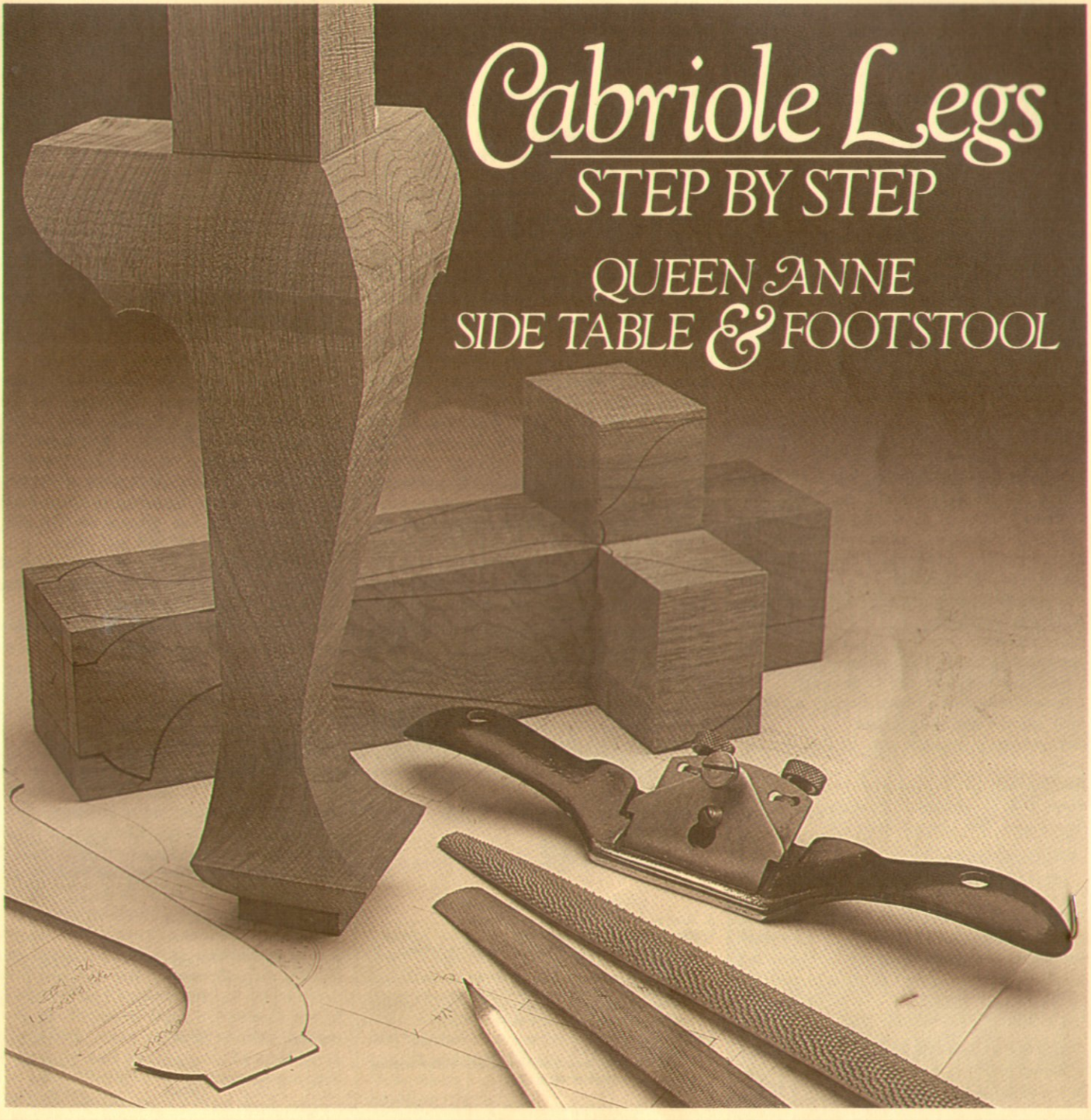

Woodsmith®

Number 43 Jan./Feb., 1986

Editor
Donald B. Peschke

Design Director
Ted Kralicek

Assistant Editors
Steve Krohmer
Douglas L. Hicks
Douglas M. Lidster

Technical Illustrators
David Kreyling
Mike Henry

Subscription Manager
Sandy J. Baum

Subscription Assistants
Christel Miner
Vicky Robinson
Jackie Stroud

Computer Operations
Ken Miner

Administrative Assistant
Cheryl Scott

Building Maintenance
Archie Krause

WOODSMITH (ISSN 0164-4114) is published bimonthly (January, March, May, July, September, November) by Woodsmith Publishing Co., 2200 Grand Ave., Des Moines, Iowa 50312.
WOODSMITH is a registered trademark of the Woodsmith Publishing Co.
©**Copyright 1986** by Woodsmith Publishing Co. All Rights Reserved.
Subscriptions: One year (6 issues) $10, Two years (12 issues) $18. Single copy price, $2.50 (Canada and Foreign: add $2 per year.)
Change Of Address: Please be sure to include both your old and new address.
Second class postage paid at Des Moines, Iowa.
Postmaster: Send change of address notice, Form 3579, to Woodsmith Publishing Co., 2200 Grand Ave., Des Moines, Iowa 50312.

BACK ISSUES

All back issues of *Woodsmith* are still available. Send for a free booklet describing the contents and prices of all back issues.

SAMPLE COPIES

If you have a friend who would like to see a copy of **Woodsmith**, just send the name and address, and we'll send a sample (at no cost).

Sawdust

ABOUT THIS ISSUE. Something was wrong. As soon as I walked into the shop, I had the feeling that something was missing. Usually when I open the door to the shop, I'm greeted with a roar of machinery: routers, table saws, pad sanders.

But as I opened the door this time, it was like stepping into the past. Everyone was hard at work, but there were only the gentle sounds of woodworking. Ted was using a rasp to shape a cabriole leg. Doug was using a spokeshave. Dave was chopping out the sockets for a dovetail drawer. And Doug Hicks was rubbing out the top coat of varnish on a table top.

It was refreshing to step back to the past. In fact, we also stepped back to a format we haven't used in a while. The whole issue is based on a major technique (making cabriole legs) and both projects incorporate that technique.

The style of cabriole (pronounced CAB ree ol) leg we're showing in this issue is from the Queen Anne period. But it should be said that this is only one style.

The idea is ancient — it evolved from Egyptian furniture. Then around the turn of the 18th century, the French revived the idea of using a representation of an animal's leg for furniture. (Cabriole comes from *capriola*, Old French for goat.) The French versions of the leg are typically more stylized, very ornate with carvings and sculpted lines.

The Queen Anne style is the first attempt of English craftsmen to incorporate this idea into their furniture. When it began (during the beginning of the 18th century) the shape was very basic. Later it evolved to include a shell carving on the knee, and then Chippendale added the ball-and-claw carved foot.

The leg described in this issue is early Queen Anne style. The basic shape is formed on a bandsaw, and then shaped with a file, rasp, shokeshave, maybe a scraper, and a lot of sanding.

In addition to this traditional style, there's another version seen on much commercially-made furniture today. It's much more slender (looking like a deer leg) and is formed almost entirely on a lathe.

But we chose to build the legs the old-fashioned way — a technique that's a lot easier than it looks. If you want to give it a try, I'd suggest gluing up a block of basswood, poplar, or even scraps of 2x4.

Then draw out the pattern and cut the leg to basic shape. Right away you'll have what looks like a cabriole leg. (See cover photo.) From there it only takes a rasp, a file and a little patience to form the leg.

INDEX. Bound in the center of this issue is a four-page index to the projects and information shown in the first 42 issues of *Woodsmith*. This year we've divided the index into two parts: one covering the general information and techniques, and the other listing all the projects.

PUBLISHER'S STATEMENT. Every year in this issue we are required by the Post Office to publish the Statement of Ownership shown below. Basically, it shows that our circulation has grown to 236,273, which is up from 197,098 last year.

NEXT MAILING. The March/April issue of *Woodsmith* (No. 44) will be mailed during the week of April 21, 1986.

STATEMENT OF OWNERSHIP, MANAGEMENT AND CIRCULATION

(Required by 39 U.S.C. 3685)

1. Title of Publication: Woodsmith. 1a. Publication No.: 0164-4114. 2. Date of Filing: October 1, 1985. 3. Frequency of issue: Bimonthly. 3a. No. of issues annually: six (6). 3b. Annual subscription price: $10.00. 4. Complete mailing address of known office of publication: 2200 Grand Avenue, Des Moines, (Polk County), Iowa 50312. 5. Complete mailing address of the headquarters of general business offices of the publisher: 2200 Grand Avenue, Des Moines, Iowa 50312. 6. Complete address of publisher, editor, and managing editor: Publisher: Donald B. Peschke, 2200 Grand Avenue, Des Moines, Iowa 50312, Editor: (same as publisher), Managing Editor (none). 7. Owner: Woodsmith Publishing Co., 2200 Grand Avenue, Des Moines, Iowa 50312; Donald B. Peschke, 2200 Grand Avenue, Des Moines, Iowa 50312; Theodore M. Kralicek, 2200 Grand Avenue, Des Moines, Iowa 50312. 8. Known bondholders, mortgagees, and other security holders owning 1 percent or more of total amount of bonds, mortgages or other securities: None. 9. (Does not apply) 10. Extent and nature of circulation:

	Average no. copies each issue during preceding 12 months	Actual no. copies of single issue published nearest to filing date (Sept. 1985)
A. Total no. copies printed (net press run)	240,860	261,437
B. Paid and/or requested circulation		
1. Sales through dealers and carriers, street vendors and counter sales	4,417	4,362
2. Mail subscriptions (paid or requested)	223,519	231,814
C. Total paid and/or requested circulation	227,936	236,176
D. Free distribution by mail, carrier or other means, samples, complimentary, and other free copies	85	97
E. Total distribution	228,021	236,273
F. Copies not distributed		
1. Office use, left over, unaccounted, spoiled after printing	12,672	25,053
2. Returns from news agents	167	111
G. Total	240,860	261,437

11. I certify that the statements made by me above are correct and complete (signed) Donald B. Peschke, Publisher/Editor

Tips & Techniques

A QUICK CENTER FINDER

I recently needed to locate the center of a piece of round stock. I don't have a commercially-made center finder, so I made my own using a combination square and a flat steel square.

Lay the combination square on top of the steel square along the 45° face. Align the straight edge of the combination square so it bisects the *inside* 90° angle of the steel square. Then clamp the two squares together with a small C-clamp.

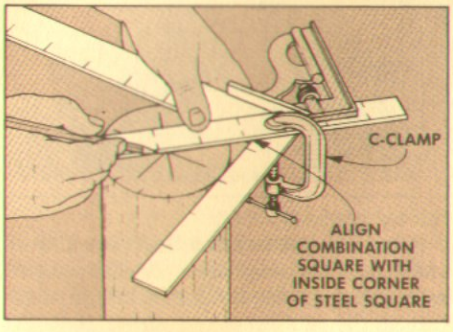

To use the center finder lay it across the round stock, with both arms of the steel square up against the side of the workpiece. Draw a line along the straight edge of the combination square across the stock. Rotate the stock and repeat several more times. The point where the lines intersect marks the center.

Gary Lucas
Maplewood, Minnesota

NO-GEL VARNISH

While working on the article for this issue about varnish we came across a number of tips to keep varnish from gelling or skinning over in a can.

Varnish skins over because it's doing what it's supposed to do — absorb oxygen and change from a liquid to a solid. To keep it from gelling, oxygen must be kept off the surface of the varnish.

One method is to cut a piece of Saran Wrap or aluminum foil to match the inside diameter of the can and float it gently on top of the varnish before closing the lid. It's messy taking it out, but it works.

Another method is to keep the amount of oxygen in the can to a minimum. Transfer the varnish to smaller containers as it's used up. Or put it in a flexible plastic container and squeeze the air out.

Some finishers keep a separate jar of marbles in clean mineral spirits. As the varnish is used up they add the marbles to the can so the level of the varnish remains right at the top.

The final suggestion is the strangest, but I've tried it — and it works (to an extent). Right before capping a can, exhale heavily *into* the can. The carbon dioxide in your breath displaces some of the oxygen and slows down the skinning.

None of these suggestions will work if the lid on the varnish can isn't tight. Don't wreck the lid when opening it. And clean the rim before capping or "chiming" it. Finally, don't hammer around the edge of the lid. Step on it or apply uniform pressure all the way around.

One other thing. It's okay to remove a thin top skin, but don't try to salvage any jello-like varnish by adding solvent. Once it gels, it's started to cure and you're working with a different material. Throw it out and buy a new can.

HOT GLUE FOR COMPOUND CUTS

When making a compound cut on a bandsaw (such as a cabriole leg) where the sawn pieces have to be replaced in order to complete the cut, I use hot melt glue from a glue gun.

A few blobs of hot glue on the waste side will re-glue the cut pieces to the main workpiece and even take up the space left by the saw kerf. Then the remaining cuts can be completed.

After the cuts are made, pull the pieces apart and peel the glue off. If the glue is used in thick dots and allowed to partially set up before assembly, the pieces come apart easily.

John Dempsey
Texarkana, Arkansas

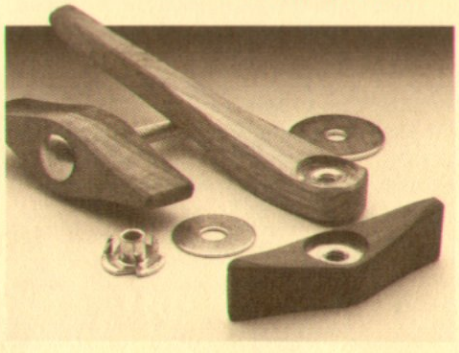

HOMEMADE WING NUTS

I make adaptive equipment for the children's therapy department at a rehabilitation center. Almost all the equipment needs adjustment, so I came up with some designs for large wooden wing nuts and handles that are easy for weak hands to grab and turn. *(Editor's Note: See photo that shows Brown's wing nuts and handles.)*

I've found these wing nuts and handles could also be useful on equipment and jigs in my home shop.

To make a wing nut for the *Woodsmith* router table, drill and counterbore for a ¼" T-nut into the center of a 3" x 4" block of ¾" stock. Then drive the T-nut into position.

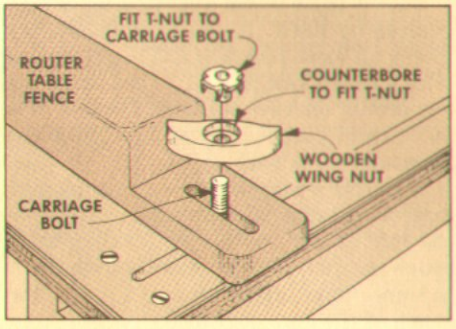

(Note: To keep the wood from splitting, don't cut out the final wing nut shape until *after* driving the T-nut home.)

Next, cut the wing nut to a comfortable shape for your fingers. Finally, I dish out the top of the wing nut so it can't be put on upside down.

Lucian H. Brown
Excelsior, Minnesota

INDEXING PROBLEMS?

We always receive a number of letters after we print the annual *Woodsmith* Index (included with this issue). The readers explain that after finding an issue and page number for an article or project in the index, they're not able to quickly find the issue in their collection of back issues.

Here are a couple tips we've heard about to solve this dilemma:

Buy some gummed index tabs from an office supply store — they're the type used on file folders. Stick the tabs on the cover of each issue so they extend from the edge and label the issue number on each tab.

Or go through all the issues and write the number of the issue on each page before the page number. This may take 10-15 minutes to do all the back issues, but when looking for an article, it saves time later.

SEND IN YOUR IDEAS

If you'd like to share a woodworking tip with other readers of *Woodsmith*, send your idea to: *Woodsmith*, Tips & Techniques, 2200 Grand Ave., Des Moines, Iowa 50312.

We pay a minimum of $10 for tips, and $15 or more for special techniques (that are accepted for publication). Please give a complete explanation of your idea. If a sketch is needed, send it along; we'll draw a new one.

Cabriole Legs

STEP BY STEP

It's easy to be convinced that making a cabriole leg is a form of sculpture — that you have to visualize the leg in a block of wood, then carve away everything that isn't a leg.

But the truth is that a cabriole leg almost evolves by itself. As an experiment, try gluing up some scraps of 2x4 to get a block with a rough size of 3"x3". Then draw the leg profile on two adjacent sides of this stock, and cut along the lines with the bandsaw.

When the waste falls away, you have the basic shape of a cabriole leg (as shown on the left in the photo). Okay, it's a little rough maybe — but all it takes from there is some filing and sanding to refine the shape of the leg.

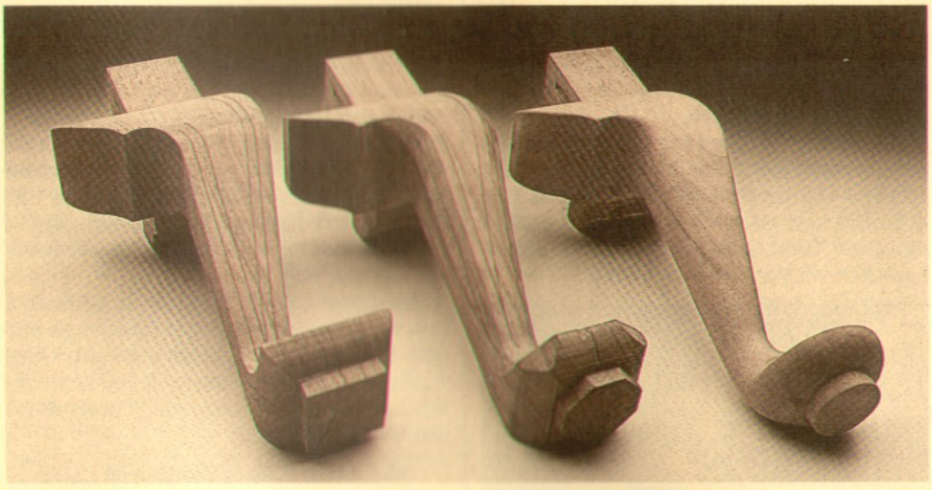

EVOLUTION OF THE LEG

Basically, a cabriole leg starts out as a square piece of stock. Depending on the pattern you're using, this blank is usually a 3"x3" square.

To get a blank this size, you can glue four pieces of 4/4 stock together. However, the glue lines will show when the leg is formed. Also, because of changes in the grain patterns, there may be some problems during the shaping process. What works much better is to use a 3"x3" turning square, see Sources, page 24.

This workpiece goes through three stages to become the finished leg. First, the leg is bandsawn to basic shape. (This is shown on the left in the photo.)

Although the leg has a lot of curves at this point, the cross sections at various points along the leg are all squares. (This is shown in the three Section views labeled "1" in the diagram at right.)

In the second stage, the corners of the squares are filed or rasped to a 45° angle to give the leg an eight-sided cross section, see Section views labeled "2."

In the third stage, the corners are rounded to produce the final shape of the leg. In its finished form, the ankle cross-section is a circle and the cross-sections at other points on the leg are squares with their corners rounded to the same radius as at the ankle.

Although it certainly doesn't look like it, all you're really doing is making a square leg with rounded corners.

LAY OUT THE LEG

The process begins by cutting the leg blank. If you're using a rough turning square, it has to be squared up first. (For more on this, see Shop Notes, page 19.)

Next, make a full-size pattern of the leg out of posterboard. Use one of the grid patterns shown with the two projects in this issue, or send for free patterns from *Woodsmith*, (see Sources, page 24).

It's best to save the original pattern and use carbon paper to trace it onto the posterboard. Then cut out the posterboard and compare it to the original to make any corrections.

MARK THE PATTERN. Now, use the posterboard pattern to mark the shape of the leg on two adjacent faces of the leg blank. First, place the pattern on the blank so the back of the corner post and the back of the ankle are flush with the edge of the blank, see Step 1.

Then mark the pattern on the leg blank. (Pencil lines are difficult to see — especially on walnut. Instead, I used a thin felt-tip marker.)

After the pattern has been marked on one face of the workpiece, flip the pattern over and mark the outline on the adjacent face so the profiles of the corner post and ankle are touching, see Step 1.

REFERENCE LINES. Now use a square to draw reference lines across all four faces of the leg where the top of the knee meets the corner post, see Step 2. (These lines are used to cut out the corner post.)

Also, another set of reference lines is drawn on the top end of the blank. These lines are continuations of the two lines marking the faces of the corner post, see Step 2.

CUT MORTISES. After the reference lines are drawn, mortises are cut in the two sides of the blank marked with the patterns, see Step 3. (The position and size of

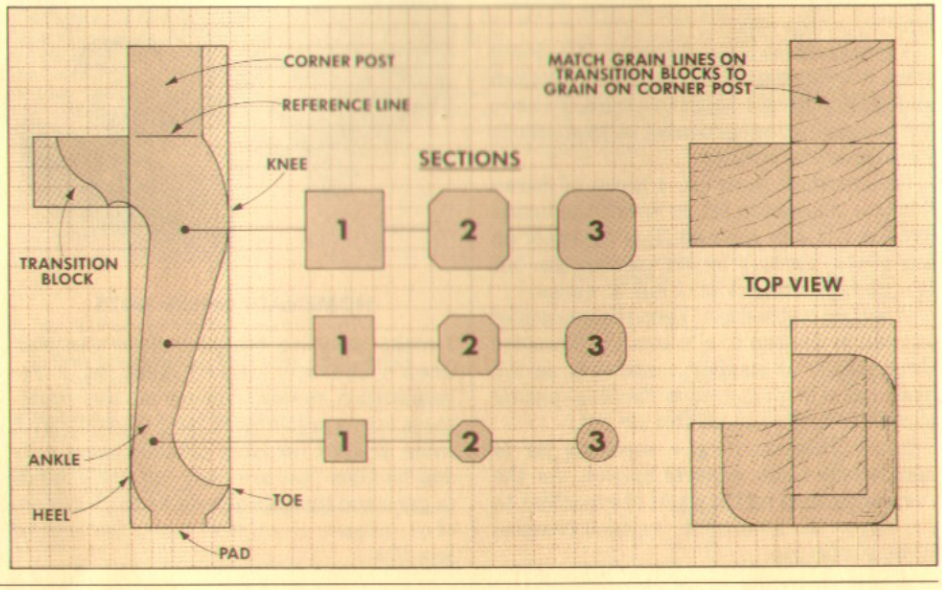

the mortises are described in the project articles.)

I cut the mortises on a drill press by drilling overlapping holes. (For details on cutting a mortise, see *Woodsmith* No. 26.)

CUT CORNER POSTS

Before cutting the curved part of the leg to shape, two cuts are made to form the faces of the corner post, see Step 4.

Position the leg blank so the blade lines up with the reference line on the end of the workpiece and clamp a fence to the table to guide the leg. Also, clamp a stop to the fence so the blade stops at the reference line at the knee. Now make the cut.

Next, rotate the workpiece 90° and make a similar cut on the adjacent face. This is a blind cut because the leg blank is positioned so one side with the pattern is facing the fence and the other side is facing the table. (Use the reference line marked on the end of the workpiece to be sure the cut is in the correct position.)

TRANSITION PIECES

At this point you have a choice as to which way to go. The method shown most often is to go ahead and cut the leg to shape. Then later, the curved transition pieces are glued to the legs.

However, I've found that gluing curved transition pieces to a curved leg is a very awkward process. Instead, I glue square transition blocks to the square leg. Then the whole thing can be bandsawn to final shape at once. (The only problem with this method is that your bandsaw must be able to cut through a thickness of about 5½".)

Cut the transition blocks to size and glue them to the side of the leg. (The size of these blocks depends on the leg pattern. This is shown in the project articles.)

To keep the blocks from sliding while being clamped, drive two small brads into the face of the leg blank. Then cut off the brads to leave two "spurs" projecting about 1/16", see Step 5.

One other note: For the best appearance, turn the blocks so the end grain on the blocks looks like it flows into the end grain on the end of the leg, see Top View in the diagram at left.

OUTLINE TRANSITION PIECES. Since the transition blocks now cover part of the pattern on the legs, the leg profile must be redrawn on the faces of the transition blocks, see Step 6.

There's also a separate pattern for the inside face of the transition blocks. Go ahead and trace this pattern on the inner face of the blocks, see Step 7.

THE PAD. Finally, the bottom end of the leg can be completed by marking the outline of the pad. Square lines across the bottom end of the leg blank. Then use a compass to draw a circle inside this square to outline the shape of the pad, see Step 8.

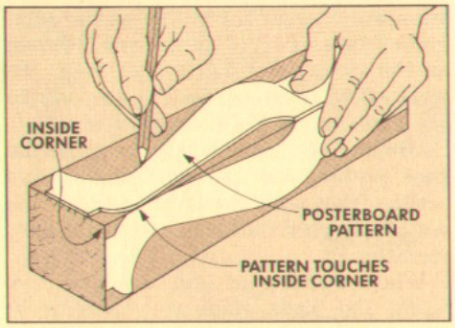

1 *To draw the leg pattern, position template so back edge of corner post and heel align with inside corner of stock. Flip template and repeat on adjacent side.*

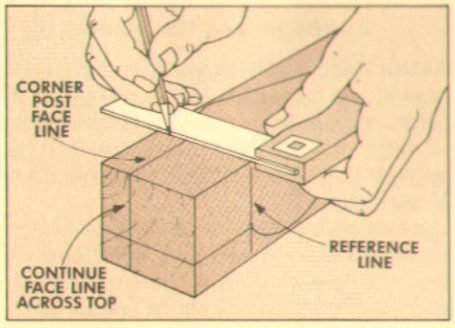

2 *Draw reference lines around all four sides where the corner post meets knee. Also draw lines on top end that continue the face lines of the corner post.*

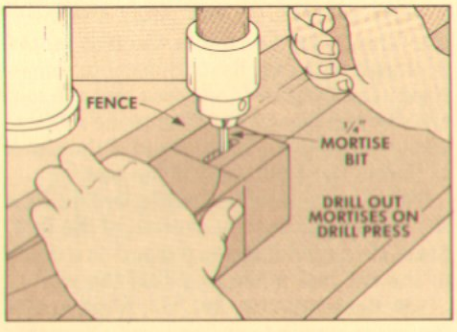

3 *Cut mortises on two faces of the corner post. Drill a series of overlapping holes to rough out the mortise. Then clean up cheeks with a sharp chisel.*

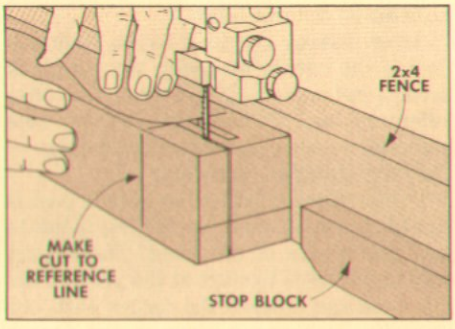

4 *Set up bandsaw to make the face cuts on the corner post. Use a fence to guide the leg and clamp a stop block to the fence to stop the cut at the reference line.*

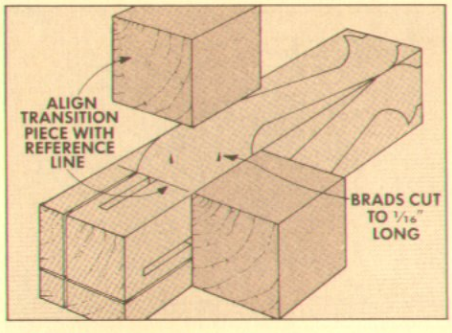

5 *Align transition blocks on reference lines and glue and clamp in place. To keep block from shifting when clamped, drive in brads and cut off to 1/16" long.*

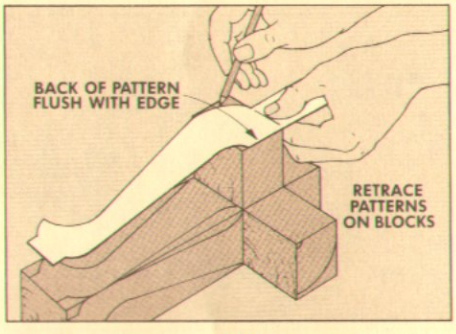

6 *Trace the curve of the knee on the outer surfaces of the transition blocks. The reference line on the pattern should align with the top of the transition block.*

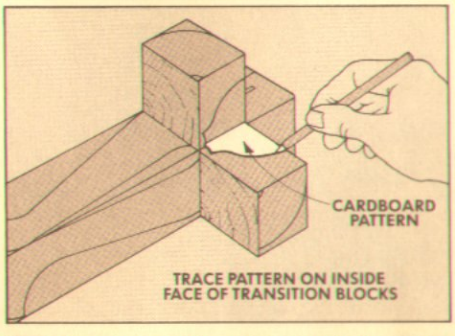

7 *A second pattern is used to trace the profile on the inner surface of the transition blocks. Place the small pattern tight in the corner and mark outline.*

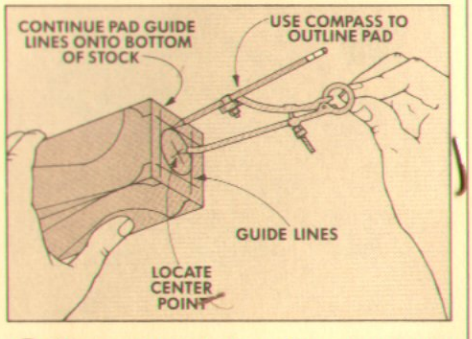

8 *Use a square to draw lines across the bottom of the leg that continue the outline of the pad. Then use a compass to draw a circle that fits inside the square.*

BANDSAW LEG TO SHAPE

At this stage, all the layout lines have been drawn, the transition blocks are glued in place, and the leg is ready to be bandsawn to rough shape. (For some tips on setting up your bandsaw for these cuts, see Shop Notes, page 19.)

BANDSAW CORNER POSTS. The bandsawing begins at the corner post, see Step 9. To free the waste around the corner post, make a cut on the reference line to intersect with the face cut made in Step 4.

As this cut is made, it's critical to stop the cut as soon as the scrap around the corner post is free. Sneak up on it slowly — a nick on the face of the corner post will be difficult to remove later.

After making the first cut to form one face of the corner post, flip the leg blank around and make a second cut on the other reference line. (Note: Both of these cuts are made on the *outside* faces of the legs — the faces *without* patterns.)

KNEE PROFILE. After the corner post is sawed to shape, position the leg blank to saw the profile of the knee. The easiest way to do this is to start at the point of the knee and saw toward the corner post, see Step 10. As you get close to the corner post, be careful not to nick the face.

SAVE THE SCRAPS. From this point on, save all the scraps that fall away while sawing the profile of the leg. These scraps are needed to cut the profile on the adjacent surface. (Part of the pattern is drawn on the pieces that fall away.) Also, the scraps need to be replaced to support the leg blank during the second set of cuts.

LOWER LEG PROFILE. After cutting the knee profile, turn the workpiece to any position that feels comfortable to cut the section between the knee down to the foot, see Step 11.

When working around the transition block, the blade guide will have to be raised to clear the block. But when the cut has progressed far enough so the blade guide is clear of the block, lower it back down. This will give the blade maximum support (and safety) for the rest of the cut.

FOOT AND PAD. At this point, the knee, the "shin," and the top of the foot on the front side of the leg have been cut to shape. Next, the bottom of the foot and the pad are sawn in two steps. First make a short, straight cut on the bottom end of the blank to define the front side of the pad.

Then reposition the workpiece to saw the curved part on the bottom of the foot. Start at the point of the toe and saw down to the cut just made to define the pad.

SAW BACK SIDE OF LEG. The front part of the leg is complete at this point. Now this process is repeated to saw out the profile on the back side of the leg, see Step 12. Raise the blade guide to cut along the transition block. Then, lower the guide and continue down the back of the leg. Finally, repeat the two-cut process to shape the pad and heel of the foot.

REASSEMBLE THE SCRAPS. After this profile is complete, the scraps are put back in place so the profile on the adjacent side can be cut. Dust off the surfaces and stick the scraps in place with carpet tape or hot-melt glue, see Step 12.

Shop Note: When the scraps are back in place, there will be a gap in the outline at the heel. Use a felt-tip marker to fill in the gap in the outline before cutting the profile on the adjacent surface.

SAW SECOND PROFILE. Now use the same procedure to bandsaw the profile on the adjacent face of the leg blank. As shown in Step 13, it may be easier this time to start at the toe and saw up to the knee, sawing the front side of the leg. Then cut the bottom of the foot and the pad. And finally, complete the process by sawing down the back side of the leg.

When this second profile has been cut, pull away the taped-on scraps, see Step 14. What you have at this point is a contoured leg that is square in cross-section, but is unmistakably the shape of a cabriole leg.

FLATTEN THE SURFACES

Once the leg is sawn to rough shape, there is a series of steps to shape the contours. However, the secret of all this is *not* to think in terms of *shaping* a contoured leg.

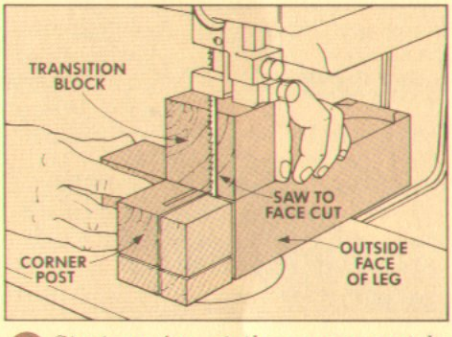

9 *Start sawing at the corner post by aligning blade with top of transition block. Saw to the cut made in Step 4. Repeat the cut on the adjacent face.*

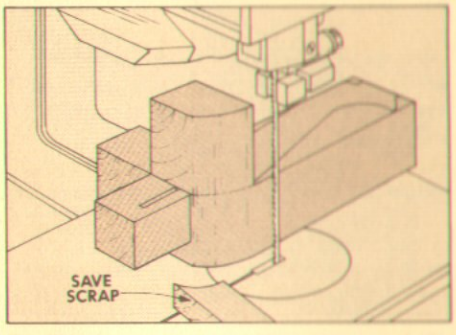

10 *Cut top of knee and transition block with blade guide raised. Saw from tip of knee back to corner post. Be careful not to nick corner post.*

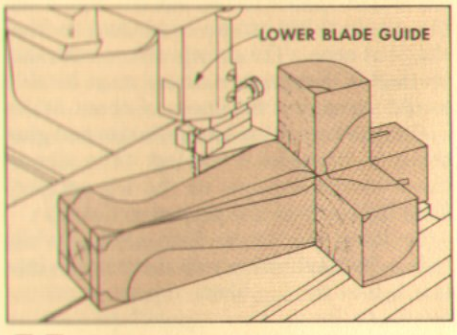

11 *Saw from knee to foot to remove waste on front of leg. Lower blade guide as soon as it clears transition block. Be sure to save waste pieces.*

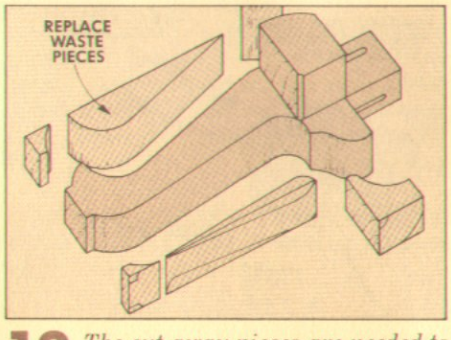

12 *The cut-away pieces are needed to support the leg blank in the next step. Use carpet tape to fasten cut-away pieces back in original positions.*

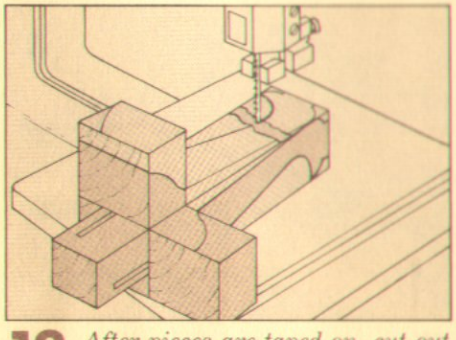

13 *After pieces are taped on, cut out the adjacent profile by flipping the workpiece and sawing along lines. Work in any direction that feels comfortable.*

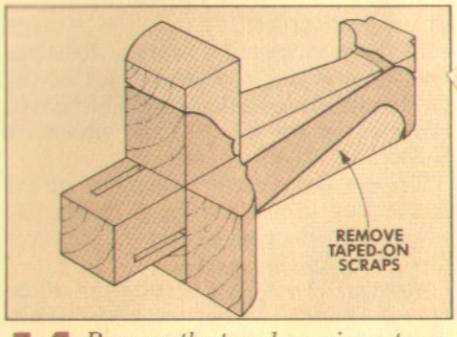

14 *Remove the taped-on pieces to reveal the basic shape of a cabriole leg. Complete each leg to this point before proceeding so scraps don't get mixed up.*

All you're really doing is *rounding over* the corners of a "square" leg.

Shop Note: To hold the leg in position so I could work on it from several directions, I used an improvised version of a carver's cradle, see Step 15. (For details on this jig, see Shop Notes, page 19.)

SMOOTH THE LEG. The first step in shaping the leg is to smooth and flatten all the dips and bumps left by the bandsaw. Use a spokeshave or rasp to smooth the long flat part of the leg, see Step 15. This section (between the knee and ankle) should be worked until it's flat, see Step 16.

SMOOTH THE CURVES. Next, the curved areas around the knee and ankle are smoothed. Use whatever tool seems to do the job best. At various points, I used a block plane, rasp, or file, see Steps 17 and 18. (For more on the type of rasps and files we used, see Sources, page 24.)

LAYOUT LINES

At this point the leg has been smoothed, but it's still square in cross section, (refer to the diagram on page 4). The next stage is to knock off all the corners at 45° to produce eight-sided cross sections at all points along the leg.

STARTING POINTS. To do this, layout lines are drawn to mark the limits of how much wood is to be removed on each corner. These lines are drawn from starting points located at the ankle.

To locate the starting points, first measure the width of the ankle and mark the center point, see Step 19. (The lines drawn from this point will be called the "center-point lines.")

Next, bisect the distance between the center point and the edges of the ankle to divide the ankle into quarters. (The lines from these points will be referred as the "quarter-point lines.") Repeat this process on all four sides of the leg, see Step 19.

DRAW CENTER-POINT LINES. Now lines are drawn from these starting points. The first pair of lines mark where the rounded corner starts. Place the pencil on the center point, and use your middle finger as a guide to maintain this spacing.

Draw a center-point line from the ankle all the way up to the knee and down to the top of the foot, see Step 20. Repeat this on the other four sides. Then turn the leg end for end to draw four more center-point lines, see Step 21.

Note: There are actually eight center-point lines drawn — two at each corner. The first four are drawn with the bottom pad facing you as shown in Step 20. The other four lines are drawn with the corner post facing you, see Step 21.

QUARTER-POINT LINES. After drawing the center-point lines, repeat the entire process, except starting at the quarter points, see Step 22. (This will also be a series of eight lines, two at each corner.)

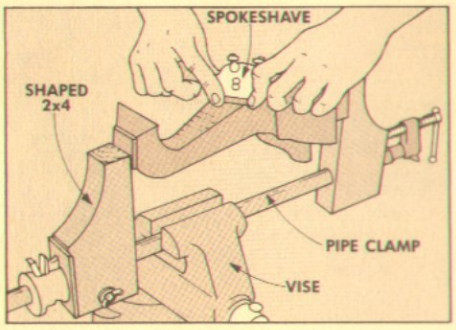

15 *Smooth the surfaces of the leg with a spokeshave or rasp. To hold the leg while working, mount it in a carver's cradle made from pipe clamp and 2x4's.*

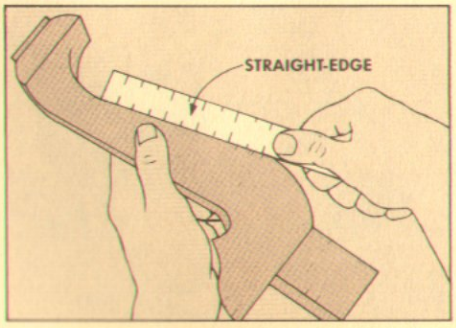

16 *The area between curve of knee and curve of ankle should be a straight line. Use a straight-edge to check progress on all four sides of leg.*

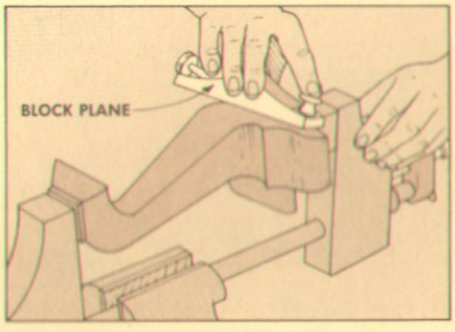

17 *Smooth the outside of the knee with a block plane, planing across the grain. Be careful to keep the curved knee surface parallel to the surface of the leg.*

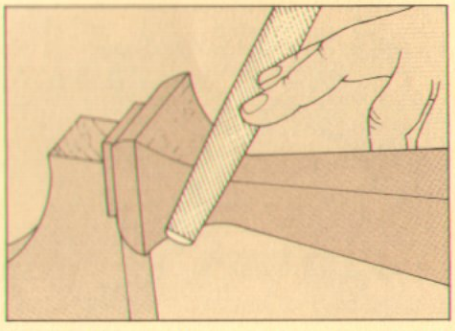

18 *Smooth the inside contour of the ankle with the rounded side of a rasp or wood file. Again, keep this surface parallel to the surface of the leg.*

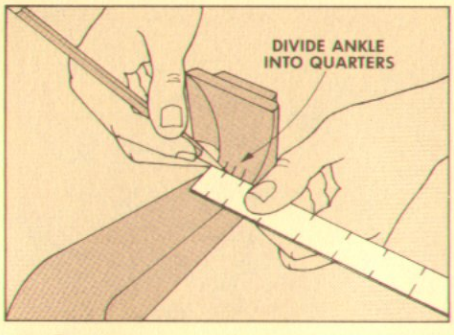

19 *Divide the narrowest part of the ankle into quarters. These marks position the layout lines used when shaping the square leg to its final contour.*

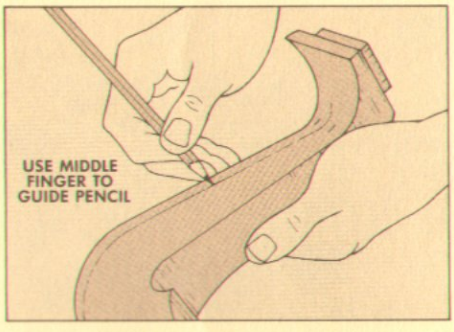

20 *Draw layout lines on one side of each corner by marking lines from the center-points on the ankle. Use middle finger to maintain distance from the edge.*

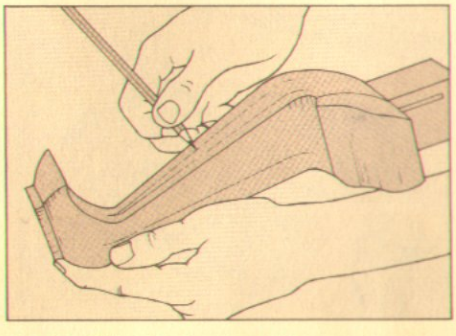

21 *Flip the leg end-for-end to draw layout lines on other side of each corner. This produces two guide lines on each corner that are used to shape the leg.*

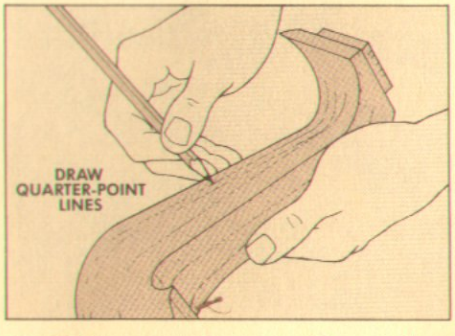

22 *Draw another set of layout lines extending from the quarter-point marks on the ankle. Again, draw two lines on each corner from the knee to the ankle.*

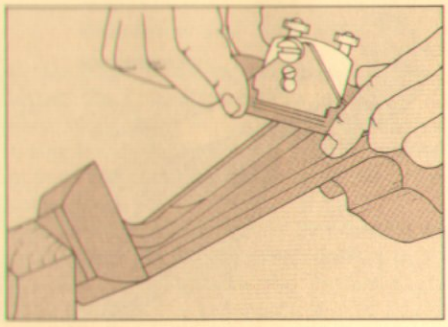

23 *To start forming the leg, remove the corners on the straight parts down to the quarter-point layout lines. A spokeshave or the flat side of a rasp can be used.*

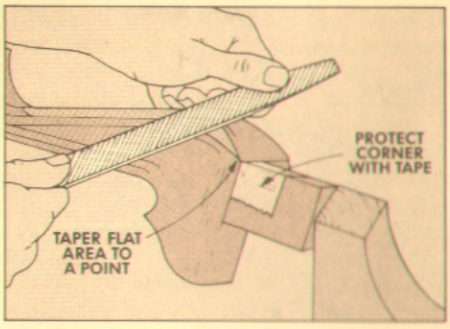

24 *Continue the flattened corner over the top of the knee so it forms a point at the corner post. Protect the corner post with several layers of duct tape.*

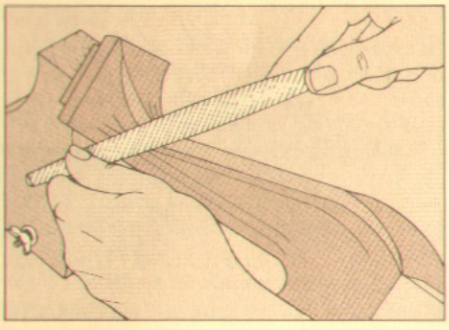

25 *Flatten the corner on the front of the ankle with the rounded side of the rasp. Continue this surface over the top of the foot to form a point almost to the toe.*

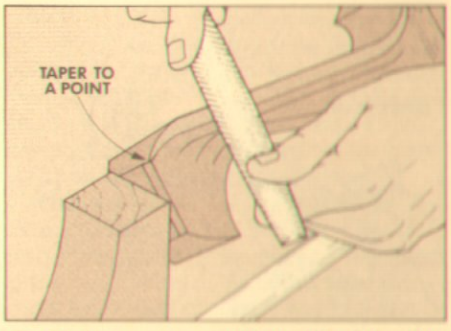

26 *Use a rasp or file to blend the flattened corner on the back of the leg down over the heel. This surface tapers to a point where the heel meets the pad.*

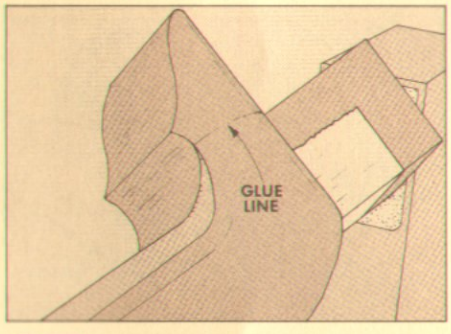

27 *At the top of the leg, shape the inside corners on the back of the knee to a tapered point that ends about where the transition block begins.*

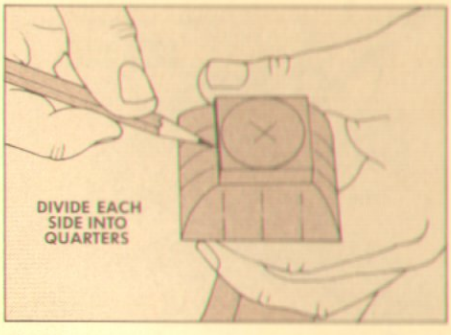

28 *To shape the foot into its final contour, divide the bottom of the foot into quarters. These marks will be used as references when shaping the foot.*

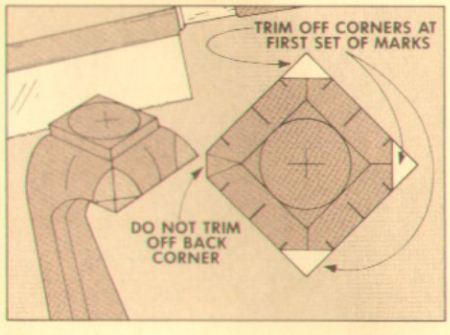

29 *Use the reference marks to cut off the front corner and both side corners of the foot. Don't cut off the corner at the heel — it will be shaped later.*

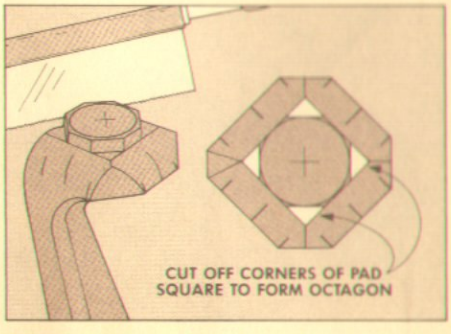

30 *To shape the pad, undercut the four corners of the pad first. Then, use edge of the circle as a guide and cut down to undercuts to remove corners.*

CHANGE THE CROSS-SECTION

Now that the layout lines are marked, the next stage is to take the leg from a square cross-section to an eight-sided cross-section. (Refer to the diagram on page 4.) This is basically a matter of removing the corners at 45° to create a flat surface down to the "quarter-point" layout lines.

FRONT OF LEG. I started this process by mounting the leg in the carver's cradle again. Then I worked on the front of the leg, removing the corners of the straight section (the "shin"), see Step 23.

This can be done with any tool that gets the job done. I was most comfortable using a spokeshave on the straight sections of the leg, see Step 23. Then I switched to a rasp and file when working around the curved areas, see Steps 24 and 25.

As I flattened the curved areas around the knee and ankle, I tapered the corners so they ended in a point, see Steps 24 and 25. At the knee, this tapered point ends right at the corner post. (To prevent nicking the corner post when filing this close, wrap it with duct tape for protection.) On the foot, the corner is tapered to a point as it reaches the front corner, see Step 25.

Shop Note: As I worked on the curved areas of the leg, I quickly became fond of using the patternmakers rasp and the cabinet file, see Sources, page 24. I usually started with the rasp and smoothed the flattened surface with the file.

BACK OF THE LEG. The back of the leg is shaped just like the front. Begin by using the flat side of the rasp on the outside curve of the heel, see Step 26. Then use the round side to flatten the inside curve on the back of the knee.

SIDES OF THE LEG. The same procedure is used on the other two corners of the leg. At the bottom, taper these corners into the foot. At the top, stop the taper halfway through the curve on the bottom of the transition piece, see Step 27.

SHAPE THE FOOT BOTTOM

After the corners on the main part of the leg have been flattened, I switched my attention to the bottom of the foot. (To work on this area, the leg is clamped vertically in a bench vise.)

TRIM THE CORNERS. The first step here is to mark the bottom of the foot so it can be cut into an eight-sided shape. Mark reference lines that divide each side of the foot into quarters, see Step 28. Then cut off the front and side corners between the marks, see Step 29. (Note: *Don't* cut off the back corner. This will become the heel.)

TRIM THE PAD. After the foot is shaped, the pad is also cut to an eight-sided shape. Start by undercutting the four corners with a dovetail saw. Then, remove the corners by sawing down to the undercuts at a 45° angle, see Step 30.

FINAL SHAPING OF FOOT

Now that the entire leg has eight flat surfaces, the shaping can begin. This is just a process of rounding over all the corners.

ROUND THE PAD. To develop a feel for this process, I started by rounding the pad. Use the flat side of the rasp with arcing strokes to shape the perimeter of the pad into a circle, see Step 31.

ROUND THE FOOT. After the pad is round, the edge of the foot is also rounded. Here the stroking action is the same as on the pad — the only difference is stopping before going around the heel, see Step 32.

Note: As the perimeter of the foot is shaped to a circle, use the edge of the pad as a visual guide. The edge of the pad and the edge of the foot should be two concentric circles, see Step 32.

THE FOOT BOTTOM. Now the rest of the foot (on the bottom between the perimeter and the pad) is shaped by rasping off the high spots, see Step 33. (I found that this contour seemed to develop by itself once I caught onto the stroking rhythm.)

ROUND THE HEEL. The last area to work on is the heel. While contouring the heel, try to visualize the entire curve (from the toe to the back of the leg) as one unit, see Step 34. Take a few strokes from one side, then a few from the other. (This will help develop the heel symmetrically.)

ROUND THE LEG

Now put the leg back in the carver's cradle to round over the rest of the leg from the ankle up to the knee. This is just a matter of rasping and filing from the "centerpoint" layout lines and blending the corner into a smooth arc, see Step 35.

To control the rounding process, form only half of each arc at a time. That is, stroke from one of the center-point lines to the center of the flattened corner, see Step 36. Then stroke from the opposite side to form the other half of the arc.

FORM THE FOOT. After the leg is rounded, the top of the foot is brought to its final shape. Begin by clamping the carver's cradle upright in a vise. Then file off the ridge on the top of the foot to get a nice smooth curve from the ankle to the perimeter of the foot, see Step 37.

THE FINAL TOUCH. The last step before the leg is sanded is easing over the top of the transition piece. This eliminates a dust-catching shoulder next to the apron, see Step 38.

The easiest way to do this is to put the apron in place and trace the apron edge on the transition piece. Then use a chisel to curve the transition piece to the line.

SANDING. The only way I know to make the sanding go easier is to talk someone else into doing it. If that fails, it's just a matter of sanding with the grain until the leg is smooth enough for a queen.

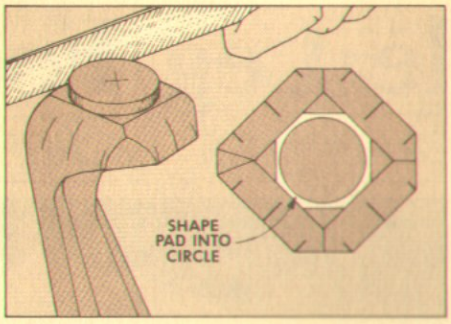

31 *Use the flat side of a rasp or file to round the pad to the edge of the traced circle. Be careful not to score the bottom of the foot with the rasp edge.*

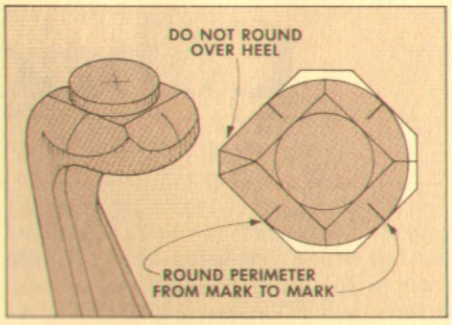

32 *Shape the perimeter of the foot from mid-point to mid-point to form a circle that's concentric with edge of pad. Do not round over area at heel.*

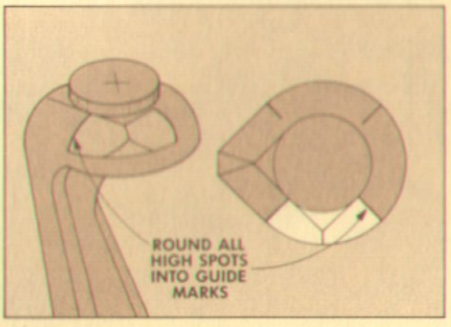

33 *Shape the bottom of the front so it curves from the pad up to the edge of the foot. Don't rasp over the guide marks until the high spots have been smoothed.*

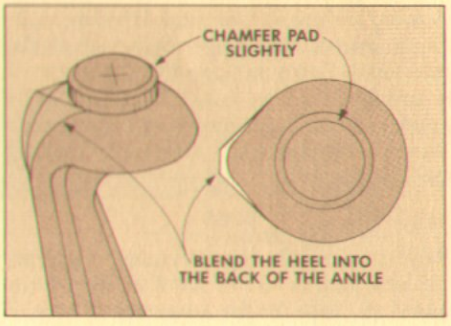

34 *Shape the back of the heel by continuing the curve on the foot bottom and blending it into the back of the ankle. Also, chamfer pad to prevent chipping.*

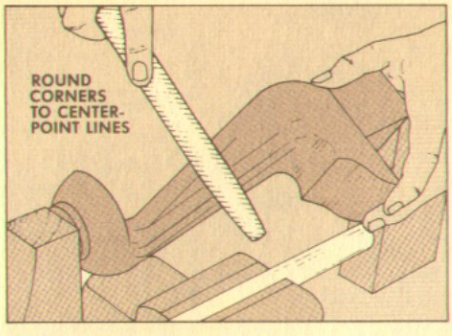

35 *Final shaping of the main part of the leg and the knee is just a matter of rounding over the corners. Use the center-point layout lines as a guide.*

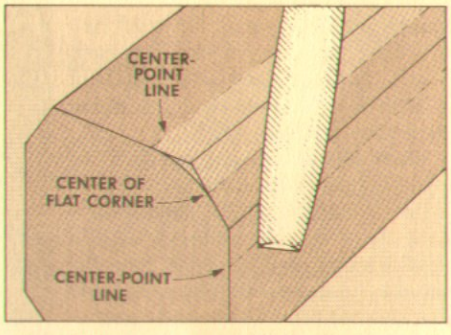

36 *To shape the corners, work from the center-point layout line on one side to the center of the flat area. Complete the arc by working from the other side.*

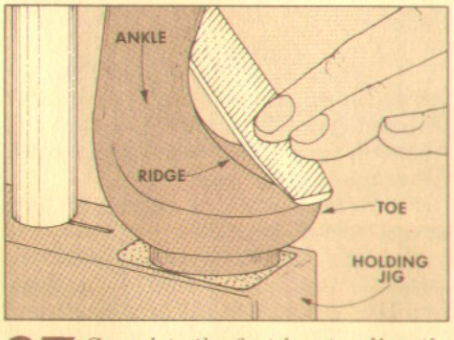

37 *Complete the foot by standing the leg upright. Use a file to smooth the ridge that extends from the ankle, blending the curve of the ankle into the foot.*

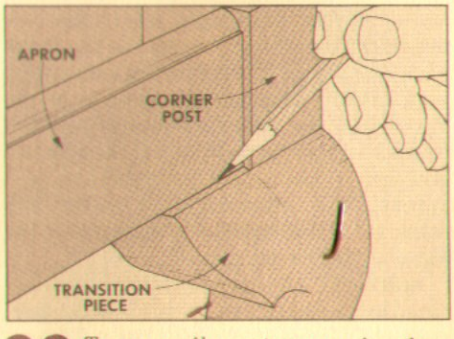

38 *Temporarily put apron in place and trace edge on transition piece. Then remove apron and use a chisel to round transition piece to marked line.*

Cabriole Leg Footstool

GRANDMA'S FAVORITE

This footstool is what I call a grandmother project. Everyone remembers a footstool like this sitting next to grandma's favorite chair in the living room. It was usually covered with a fine example of grandma's needlepoint. But it always sat *next* to the chair, not *in front* of it, since you weren't allowed to put your feet on it. Grandmothers have their ways.

It's a good project to practice the cabriole leg technique (see page 4) before tackling a project with longer legs such as the side table shown on page 14. The footstool is simply four legs joined by four aprons and has a fabric-covered cushion mounted between the aprons. I started by making the legs.

LEGS

Begin work on the legs by squaring up four 16"-long blanks to 2½" by 2½". (See technique on page 19 for squaring up rough stock.) These blanks are long enough to make one 12"-long leg (A) and the two transition blocks (B) that are glued to the sides of the leg, see Fig. 1.

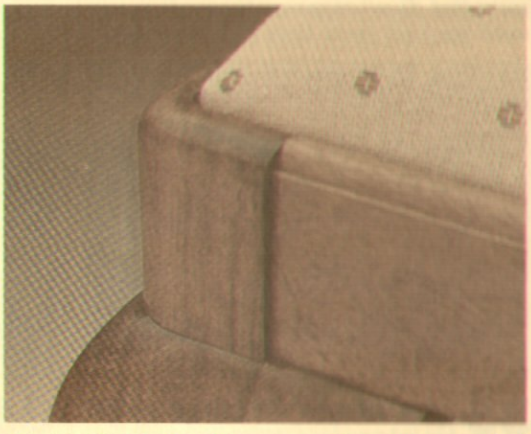

TRANSITION BLOCKS. Once the blanks are squared up, trim off two 1¾"-long transition blocks from each blank. (Note: These blocks may look a little odd because they're wider than they are long.)

LEGS. Next, cut each leg to a finished length of 12" from the remaining section of the blank. Then make a pattern of the leg shape from the grid drawing in Fig. 1 (or send for the free pattern, see Sources, page 24). Lay out the pattern on two adjacent faces of each leg blank. (For a complete explanation of this, see the step-by-step article starting on page 4).

After the pattern is marked on the blank, use a square to draw reference lines across all four faces right where the bottom of the corner post meets the top of the knee, see Fig. 2. The reference lines on the pattern sides indicate the location of the *top* end of the transition blocks and the *bottom* end of the mortise for the mortise and tenon joints that join the legs and aprons. The reference lines on the two other sides are needed when cutting the faces of the corner posts.

MORTISES. After the leg patterns are laid out, the mortises can be cut. These mortises are ¼" wide and slightly over 1" deep. They're positioned on the two faces with the patterns, see Fig. 2. Locate the top end of the mortises ⅝" down from the top and centered 1¼" from the back inside corner of each leg. Then I cut them out on a drill press. (A step-by-step article on mortise and tenon joinery appears in *Woodsmith* No. 26.)

APRONS

Once the mortises were complete, I switched gears for a minute and cut the tenons on the ends of the aprons to match the mortises in the legs.

CUT TO SIZE. Start by ripping all four aprons from 4/4 (13/16" thick) stock to a final width of 2¼". Then trim the two front/back aprons (C) to a length of 13½". (This allows for a 11½" shoulder-to-shoulder length and 2" for the 1"-long tenons on each end, see Fig. 3.)

Next trim the two end aprons (D) to a length of 10½" (which allows 8½" for the shoulder-to-shoulder distance).

FIGURE 1

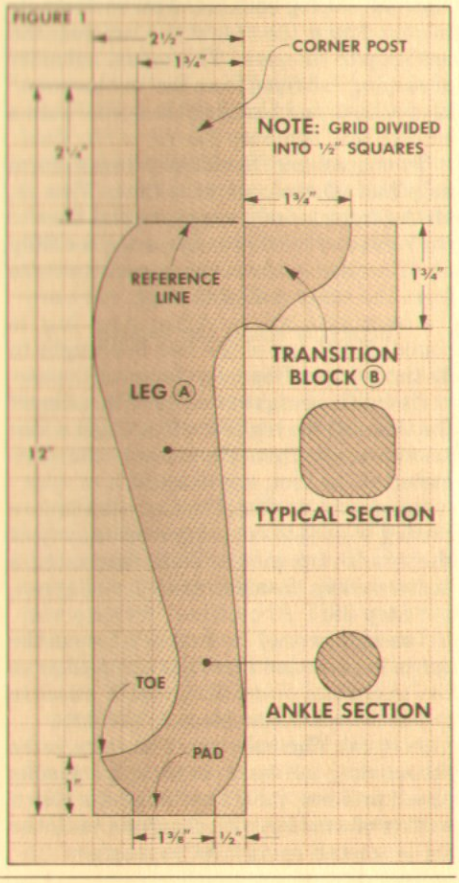

CUT TENONS. After the aprons are trimmed to length, cut 1"-long tenons on the ends. Center the tenon on the thickness of the apron, and cut it until it's just thick enough to fit into the mortise in the legs, see End View, Fig. 3.

Now trim ⅝" off the top edge of the tenon. This narrows the tenon so it will fit into the 1⅝"-long mortise in the leg, see Fig. 3. (Note: When the leg and apron are joined, the top of the apron should be flush with the top of the corner post, and the bottom of the apron should rest on the transition block of the leg.)

RABBET APRONS. After the tenons are complete, rout a ⅜" rabbet ½" deep on the inside top edge of each apron for the plywood cushion base.

I routed the rabbets using a ½" straight bit and a fence on the router table, see Step 1, Fig. 4. (Shop Note: Stand the aprons on edge when cutting the rabbet to prevent chipout on the exposed top edge.)

ROUND OVER APRONS. Next rout a ¼" round-over profile with a 3/32" shoulder on the face opposite the rabbet. Once again, I used the router table but this time laid the apron down flat, see Step 2, Fig. 4.

THE LEG/BLOCK UNIT

Once the aprons are complete, work can continue on the legs and transition blocks.

CUT THE CORNER POSTS. Start by cutting two face cuts on the corner posts of each leg (refer to page 5). Locate these cuts 1¾" from the back edge and run the cuts from the top of the leg blank to the reference line.

GLUE ON BLOCKS. After the face cuts are made, glue and clamp the transition blocks onto the sides of the legs. (Note: They're glued on so the grain direction is vertical.) Each block should be flush with the front and back of the leg, and the top edge of the block should be right on the reference line.

THE PROFILE. After the transition blocks are glued on, lay out the rest of the leg and transition block patterns and also lay out the round pad on the bottom of the foot. Then the fun begins. Cut out the leg/block units on the bandsaw and shape the profiles. (Once again, this procedure is explained in the article on pages 4-9).

ASSEMBLY

Finally, after the legs are shaped, the leg/apron assembly can begin, see Fig. 5. I glued up the legs in pairs, starting with the two front/back aprons (C) and corresponding legs.

Shop Note: Be sure the clamp pressure is directly over the joint so the aprons remain square to the legs. If they're not, the footstool will be out of square when the end aprons are clamped in place.

When the two front/back units are dry, glue and clamp the end aprons (D) between the two units to complete the assembly.

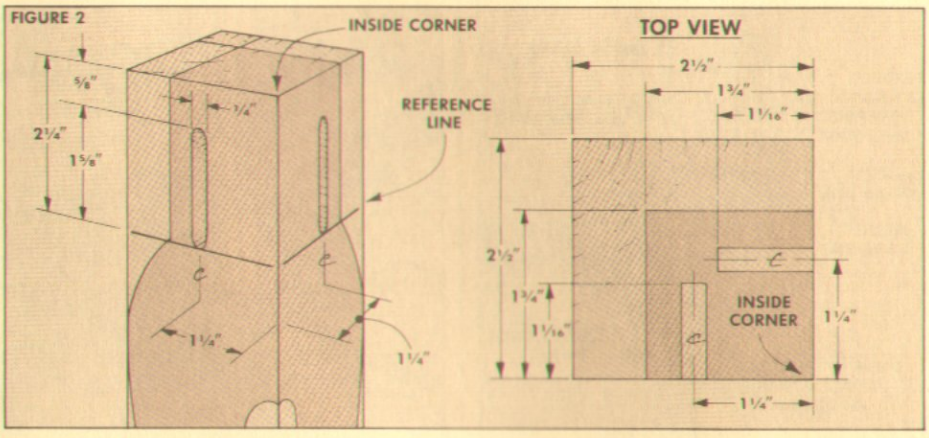

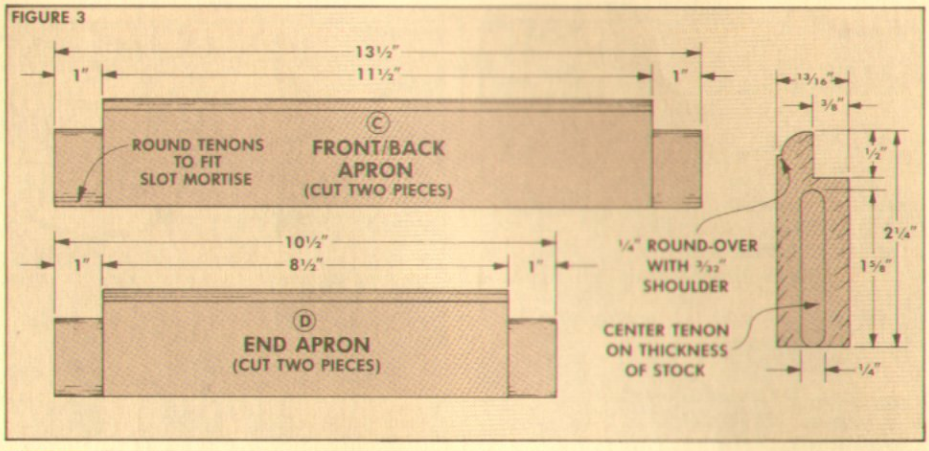

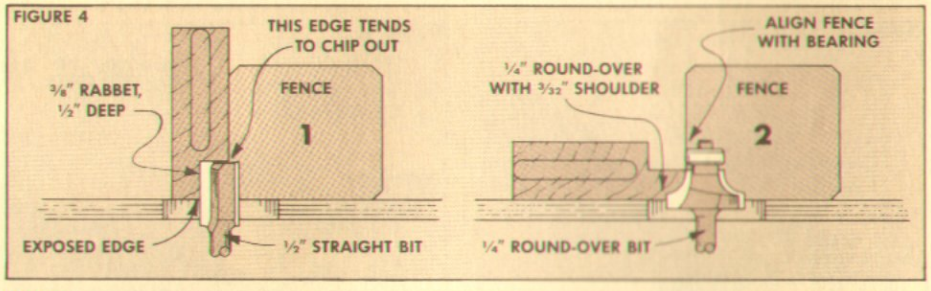

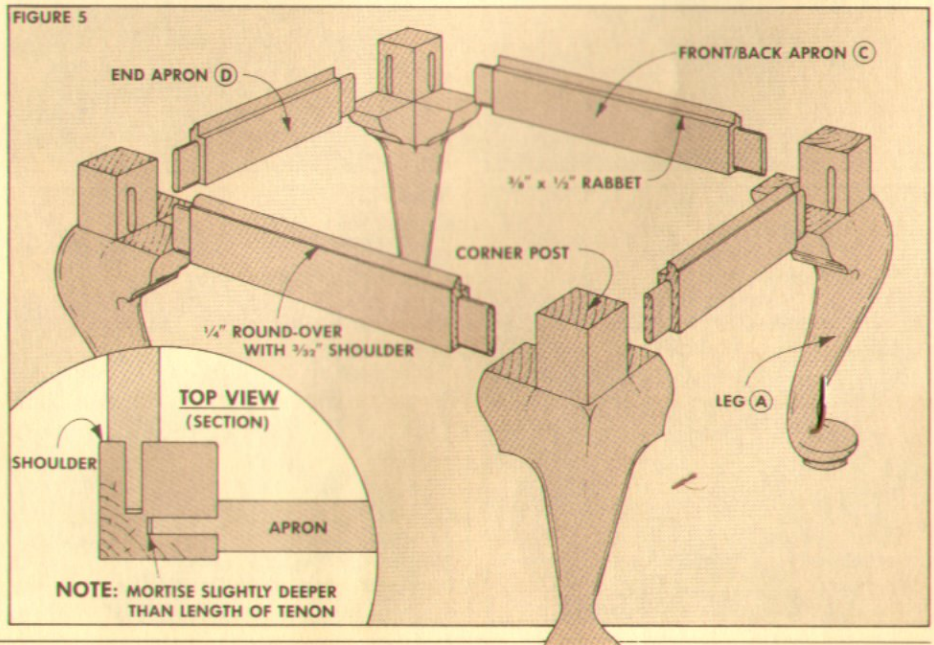

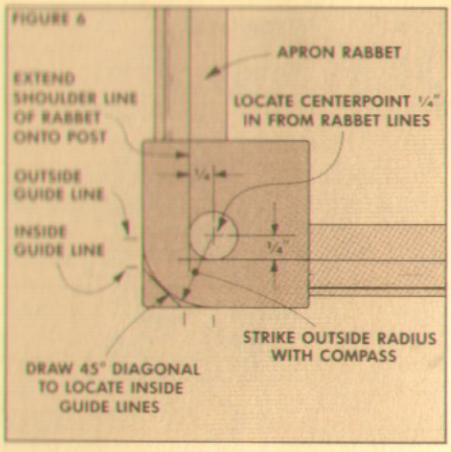

FIGURE 6

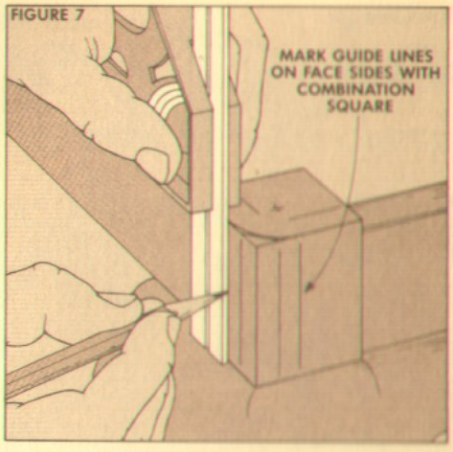

FIGURE 7

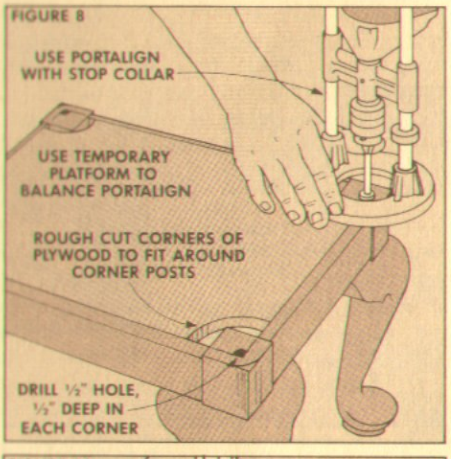

FIGURE 8

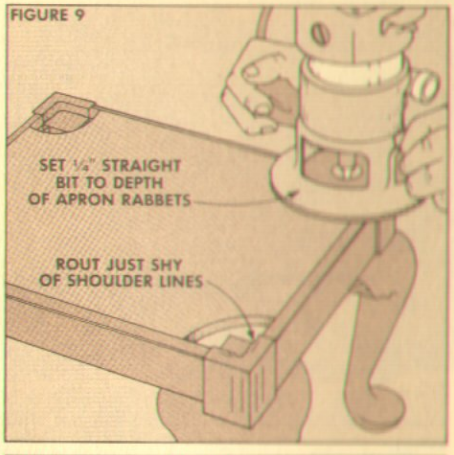

FIGURE 9

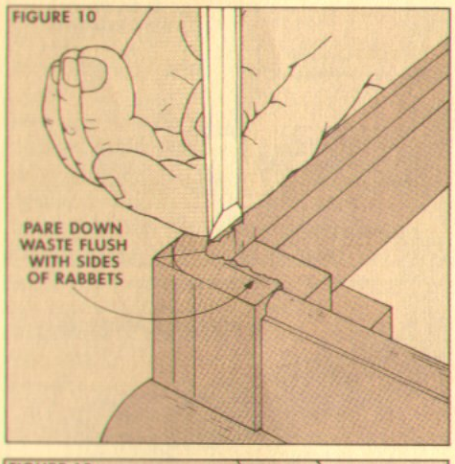

FIGURE 10

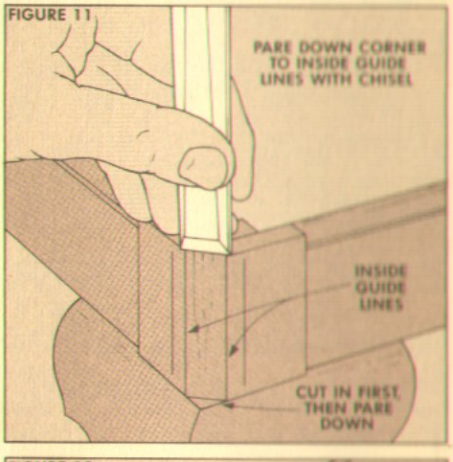

FIGURE 11

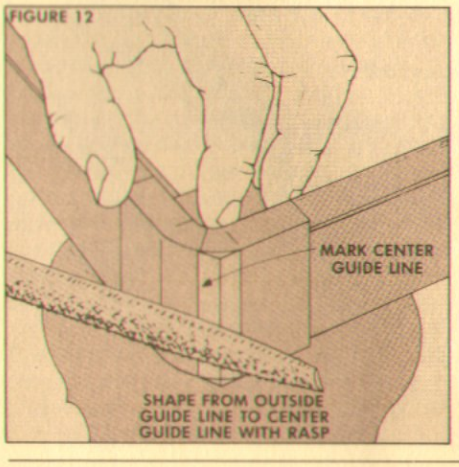

FIGURE 12

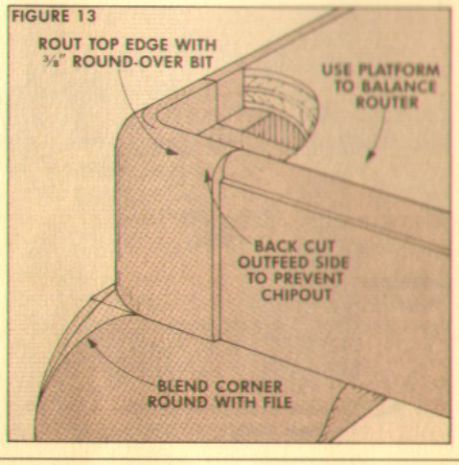

FIGURE 13

LAY OUT THE CORNERS

After the footstool is assembled, work can continue on the corner posts. The inside corners of the posts are routed out to accept the plywood cushion base, and the outside corners are rounded to a smooth radius.

EXTEND THE RABBET LINE. I started by laying out some reference lines and a centerpoint. First extend the line of the rabbets (in the aprons) onto the top of each corner post, see Fig. 6.

CENTERPOINT. Then locate a centerpoint ¼" in from the extension lines, see Fig. 6. This point serves two purposes. First, it's the centerpoint for a ½"-dia. hole that forms the *inside* radius for the notch. Second, it's the centerpoint to determine the *outside* radius of the corner post.

DRAW OUTSIDE RADIUS. To draw the outside radius, place the point of a compass on the centerpoint and the pencil of the compass even with the face of the corner post and strike an arc. Then use a combination square to draw a 45° line across the corner that just touches the arc, see Fig. 6.

GUIDE LINES. Next, use the square to extend two guide lines down each face of the corner post, see Fig. 7. Extend one line straight down from the point where the arc meets the face. Then extend another line down from the point where the 45° line cuts across the corner.

CUTTING THE NOTCH

After the layout is complete, a notch can be routed in the top of each corner post to accept the ½" plywood top.

PLYWOOD PLATFORM. Begin by cutting a temporary ½" plywood platform to sit in the rabbets. (This platform is used to balance the Portalign and router, refer to Figs. 8 and 9.) Then roughly cut out the corners of the plywood so they fit around the corner posts.

INSIDE CORNER. To form the inside corner, drill a ½"-dia. hole, ½" deep (to match the depth of the rabbet), see Fig. 8.

Next use a ¼" straight bit in the router to freehand rout the waste from the inside corner of each post. Rout just shy of the reference lines, see Fig. 9. Then, clean up the shoulders with a chisel until they're flush with the rabbets, see Fig. 10.

OUTSIDE RADIUS

To make the outside radius, use a sharp chisel to pare down the corner to the inside guide lines. (This cuts a 45° angle off the corner, see Fig. 11.) Now mark a center line halfway between the two inside guide lines. This center line serves as the high point of the radius.

FILE TO SHAPE. Use a rasp to shape the final outside radius by rounding from the outside guide lines to the high point (center line), see Fig. 12. After the outside radius

is rounded, blend the knee of the leg into the rounded corner with a file, see Fig. 13.

ROUND OVER TOP EDGE. The last step on the corner post is to round over the top edge with a ⅜" round-over bit, see Fig. 13. (Use the temporary plywood platform to balance the router while routing.)

THE CUSHION

I'll have to admit that the cushion and upholstery scared me as much as anything on this project. But after I got into it, I found that it's not too difficult.

PLYWOOD BASE. Start by cutting the ½" plywood base (E) so it's 3/16" smaller (both width and length) than the distance between the rabbets. Then knock off the sharp corners and ease the edges of the plywood, see Fig. 14.

FOAM PAD. To do the upholstery, start by cutting a 1"-thick foam pad to the same size as the plywood. Then bevel all four edges of the foam to 45°. (I did this on a bandsaw.) Once it's beveled, fasten the foam to the plywood with double-sided carpet tape. It seems like the bevel should go up, but it doesn't. By putting it *down* the foam will form a smooth curve when the fabric is pulled down tight, see Detail in Fig. 14.

BATTING. On top of the foam add a piece of 1"-thick cotton batting. Slightly feather out the edges by hand to create a domed appearance, see Fig. 14.

And finally add a thin piece of polyester batting (3 oz.). Cut this piece about 2" wider and longer than the base and trim off the corners so it doesn't bulk up when it's pulled down tight, see Fig. 15.

FABRIC. The whole cushion is topped off with fabric (or grandma's needlepoint). I cut the fabric about 5" larger (both width and length) than the base so I could pull it under and staple it to the bottom.

There's a trick to getting nice rounded corners without wrinkling the fabric. Cut two triangles off each corner, leaving a ¾"-wide tab in the middle, see Fig. 15.

GUIDE LINES. Once the fabric is cut, assemble the layers. To help keep the fabric even, I penciled in guide lines 1½" in from all four sides of the plywood, see Fig. 16.

Then I used 5/16" staples and a staple gun to fasten down the center of each side. After the centers are secure, add a staple on each side of the center one. Then continue stapling in this sequence, checking the guide lines to make sure the fabric is stretched evenly.

CORNERS. When you get to the corners, staple along the angle cut, see Fig. 17. Then pinch the corners and pull the tab up and over the back. Now staple across the tab and along both edges of the tab, and then trim away the excess, see Fig. 18.

FINISH. Finally, I brushed on five coats of thinned varnish (refer to article on page 22) and then attached the cushion with four "L" brackets, see Fig. 19.

FIGURE 14

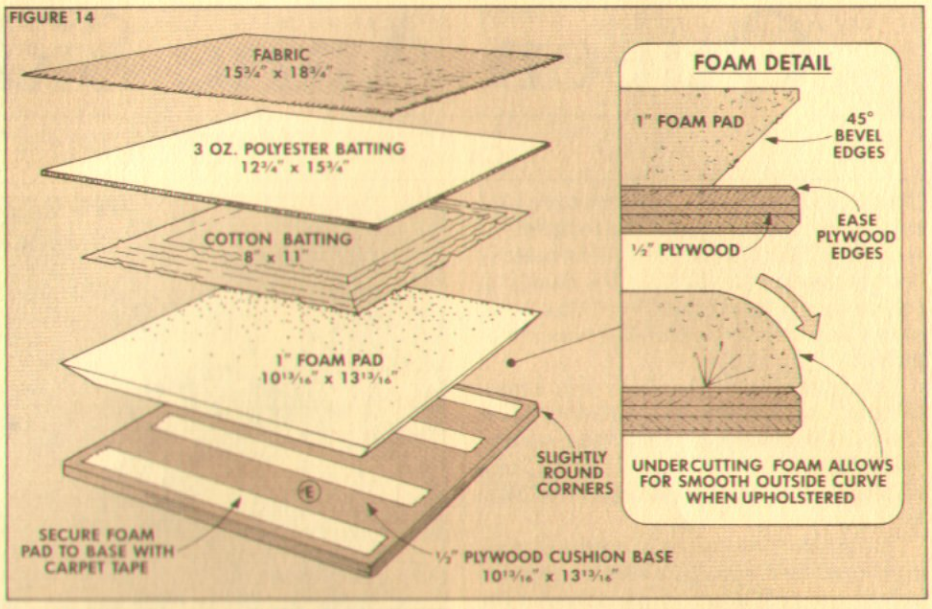

FIGURE 15

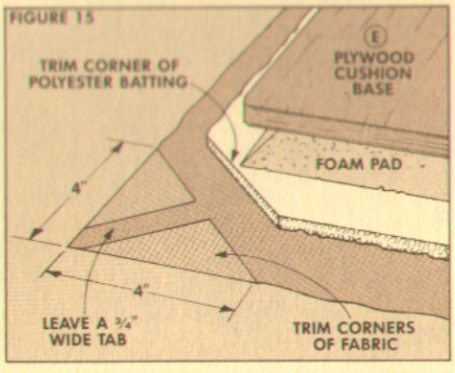

FIGURE 16

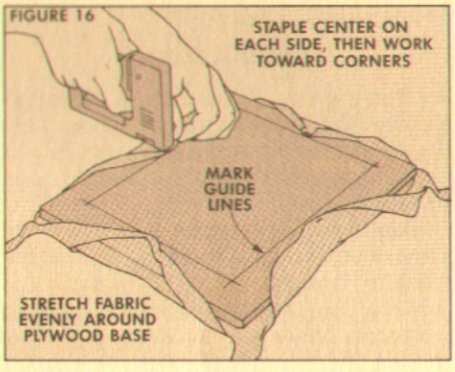

FIGURE 17

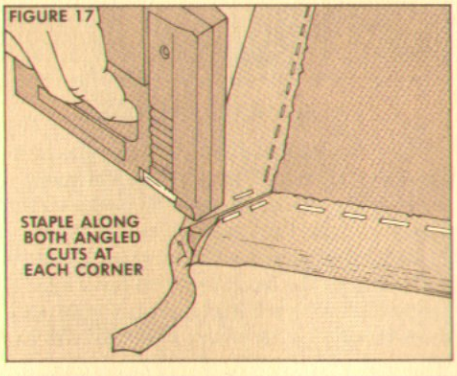

FIGURE 18

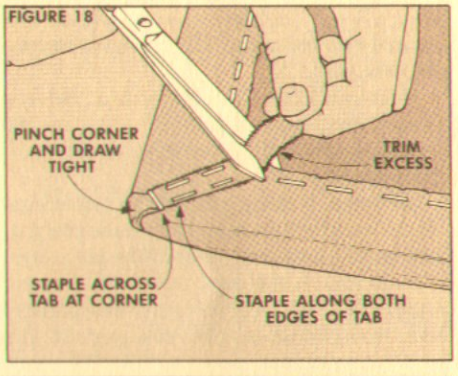

FIGURE 19

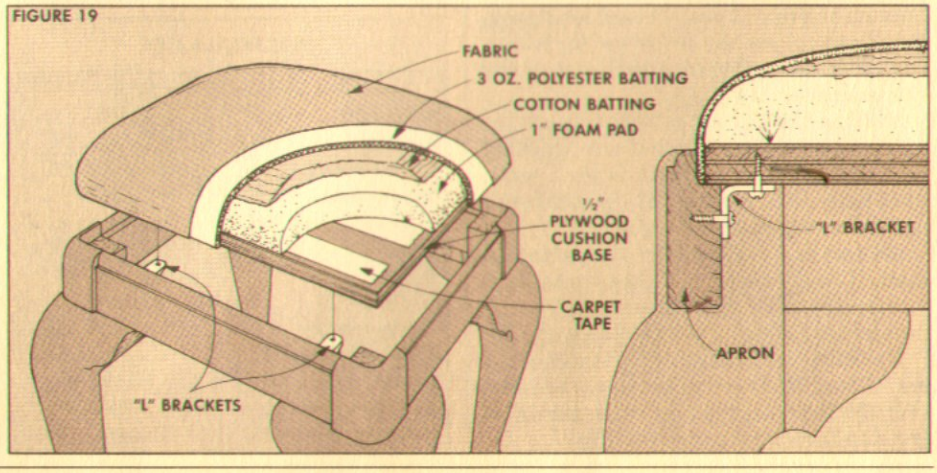

Queen Anne Side Table

BUILD A FAMILY HEIRLOOM

There are a few pieces of furniture that every woodworker would love to build . . . someday. This Queen Anne side table is one of those pieces. Besides the beauty of the design, the attraction of this table seems to be related to the skill required to build it.

I'm not saying that you have to be a master craftsman to build it. You don't. But there is the challenge of learning several woodworking techniques and pulling them all together to produce one piece of heirloom furniture.

The primary technique of course is making the cabriole legs. (The step-by-step details of this technique are described in the article starting on page 4.)

CABRIOLE LEGS

Each leg starts out as a block of walnut 2¾" square by roughly 28" long. This length includes enough for one leg (A) plus the two transition blocks (B) that are glued on near the knee, see Fig. 1.

Shop Note: You can glue up four pieces of 4/4 stock to form the blank for the leg, but the glue lines will show when the leg is formed. Also, because of changes in grain patterns, there may be some problems during the shaping process. Instead, I used a 3"x3" turning square which was trimmed down to the 2¾" square size, see Sources, page 24.

After squaring up the stock to 2¾" (see Shop Notes, page 19), cut off a 21¼" length for the leg and two 2" lengths for the transition blocks.

PATTERN. Before gluing the transition blocks on, the first step is to mark the pattern on two adjacent faces of the leg blank.

To do this, make a pattern from the grid drawing in Fig. 1, or order the free pattern from *Woodsmith*, see Sources, page 24. It's best to use carbon paper to trace this pattern onto a piece of posterboard (or Masonite). Then cut out the shape and lay it over the printed pattern to make sure the shapes are the same.

Now use the cut-out pattern to mark the outline on the legs. Since I was working with walnut, it was difficult to see a pencil line. Instead, I used a felt-tip marker to draw the pattern on the leg blank.

REFERENCE LINES. After the pattern is marked on the blank, use a square to mark a reference line right where the corner post meets the top of the knee, see Fig. 1.

Mark this line around all four faces of the leg. (These lines are used later when cutting the leg to shape and when gluing on the transition blocks, refer to Fig. 7.)

MORTISES IN THE LEGS

Before cutting the legs to shape, the mortises are laid out. The mortises are marked on the two *inside* faces of the legs — the faces with the patterns marked on them.

However, because the mortise layout is different on the front legs and back legs, it helps to mark each leg to indicate the position it will be in when the table is assembled, refer to Fig. 6.

MORTISES ON BACK LEG. The mortises on the *back* legs are the same on both faces — ¼" wide by 3¾" long by 1 1/16" deep and centered 1¼" from the inside corner, see Fig. 2. This position (centered 1¼" from the corner) is such that there will be a small shoulder (approximately ⅛" wide) between the face of the apron and the face of the corner post of the leg, see Fig. 5.

MORTISES ON FRONT LEG. The mortises on the two *front* legs are a little trickier be-

MATERIALS LIST

	Overall Dimensions: 22"H x 20"W — 24"D	
A	Legs (4)	2¾ x 2¾ - 21¼
B	Transition Blocks (8)	2¾ x 2¾ - 2
C	Side Aprons (2)	13/16 x 5¼ - 20
D	Back Apron (1)	13/16 x 5¼ - 16
E	Lower Drawer Rail (1)	13/16 x 1½ - 16
F	Top Drawer Rail (1)	13/16 x 1¾ - 15½
G	Top	13/16 x 20 - 24
H	Kickers (2)	13/16 x 1½ - 18 13/16
I	Runners (2)	13/16 x 1½ - 19¾
J	Drawer Front (1)	13/16 x 3⅝ - 14⅜
K	Drawer Sides (2)	½ x 2⅞ - 18
L	Drawer Back (1)	½ x 2⅜ - 13⅝
M	Drawer Bottom (1)	¼ x 17⅞ - 13⅛

CUTTING DIAGRAM

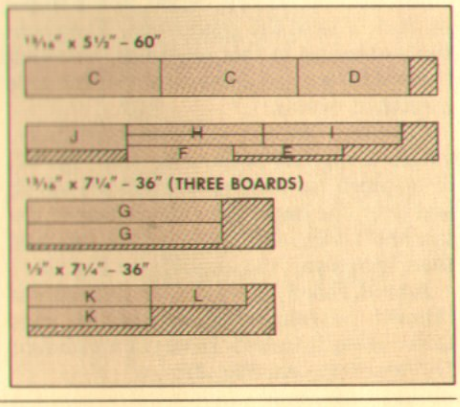

cause the two mortises are different sizes and positioned differently. One side has a 3¾"-long mortise for the side apron (that's positioned exactly the same as on the *back* legs), see Fig. 3.

But the other side has a mortise only 1" long for the lower drawer rail (E), refer to Fig. 6. This mortise is also positioned differently — it's centered 1⅜" from the inside corner instead of 1¼", see Fig. 3.

Shop Note: Actually what you're doing by moving the center line of this mortise is shifting the rail forward so it sticks out in front of the corner post a little. Then it can be planed perfectly flush later, see Fig. 5.

After the mortises were marked on all four legs, I drilled them out on a drill press by drilling a series of overlapping holes. Then I cleaned up the cheeks with a sharp chisel. (For a step-by-step article on cutting mortise and tenon joints, see *Woodsmith* No. 26.)

THE APRONS

When the mortises were complete, I proceeded to make the three aprons and the lower drawer rail out of 4/4 (13/16" thick) stock. The two side aprons (C) and the back apron (D) are all cut to a common width of 5¼".

Then the side aprons (C) are trimmed to a length of 20". This allows a shoulder-to-shoulder length of 18", and 2" for the two 1"-long tenons on each end, see Fig. 6. The back apron (D) is 16" long (with a shoulder-to-shoulder length of 14").

DRAWER RAIL. Next, the lower drawer rail (E) is cut 1½" wide and to a length of 16". This allows a shoulder-to-shoulder length of 14" (to match the back apron).

TENONS. After all four pieces are cut to size, cut tenons centered on the ends of each piece to fit the mortises in the legs, see Fig. 4.

When the tenons fit, dry-assemble the table and check to see that the top edges of the three aprons are flush with the top ends of the corner post. Also, the bottom edges of these aprons and the lower drawer rail should be aligned on the reference lines on the legs.

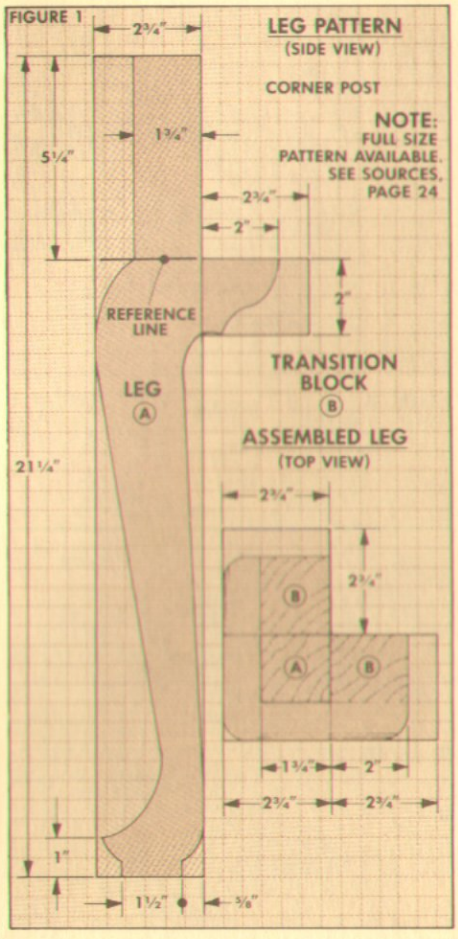

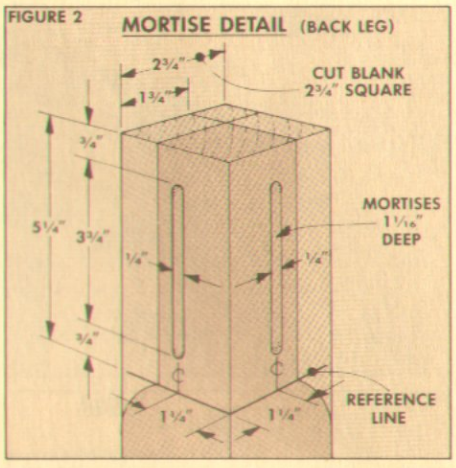

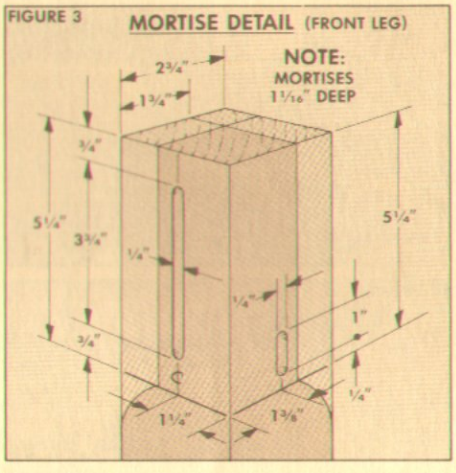

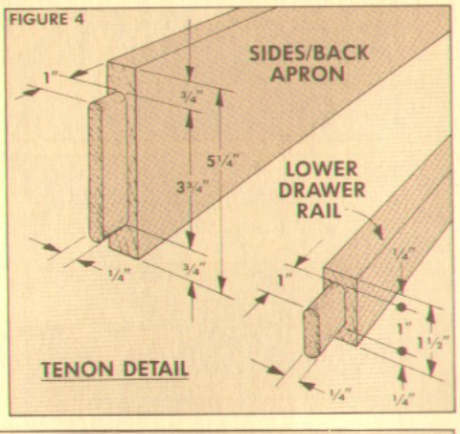

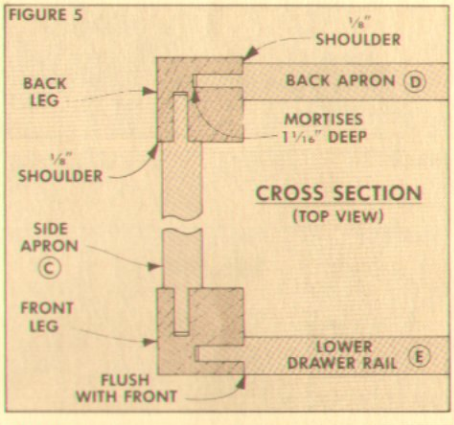

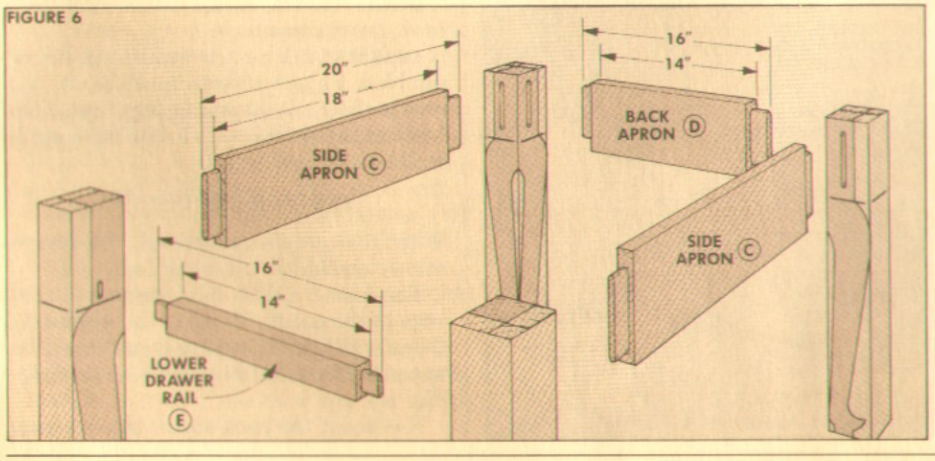

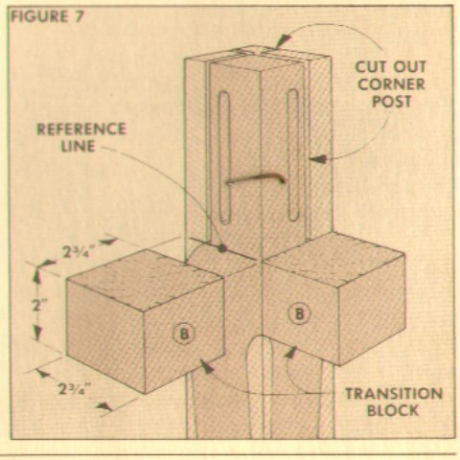

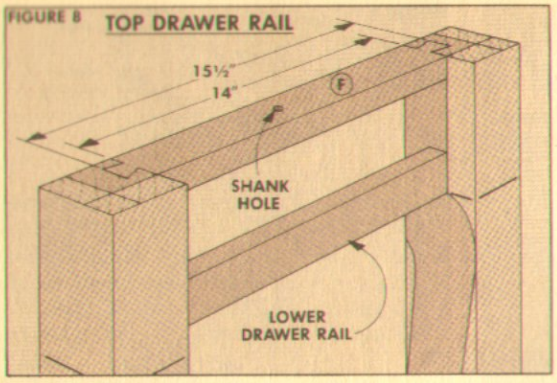

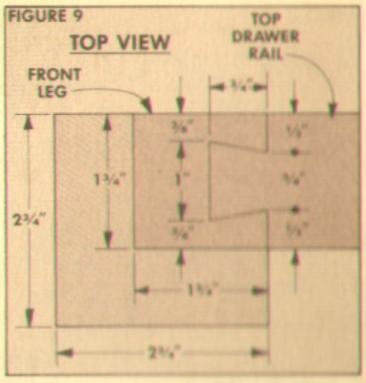

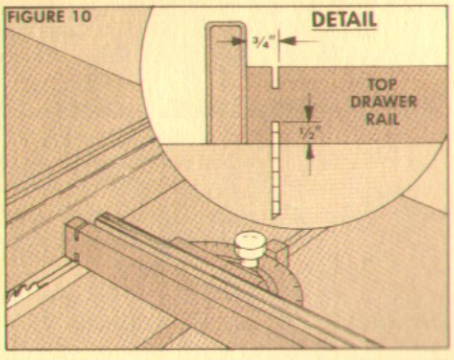

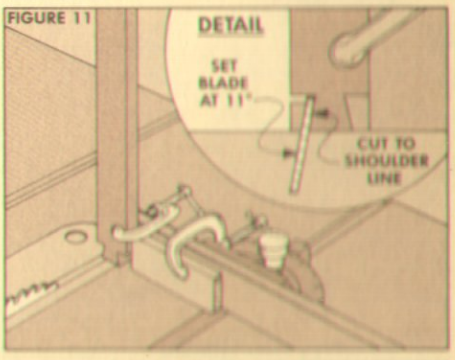

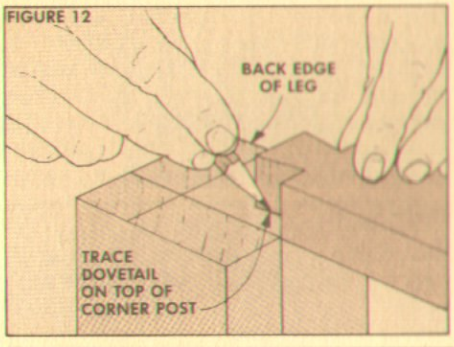

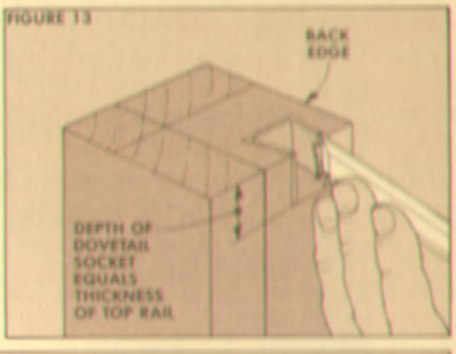

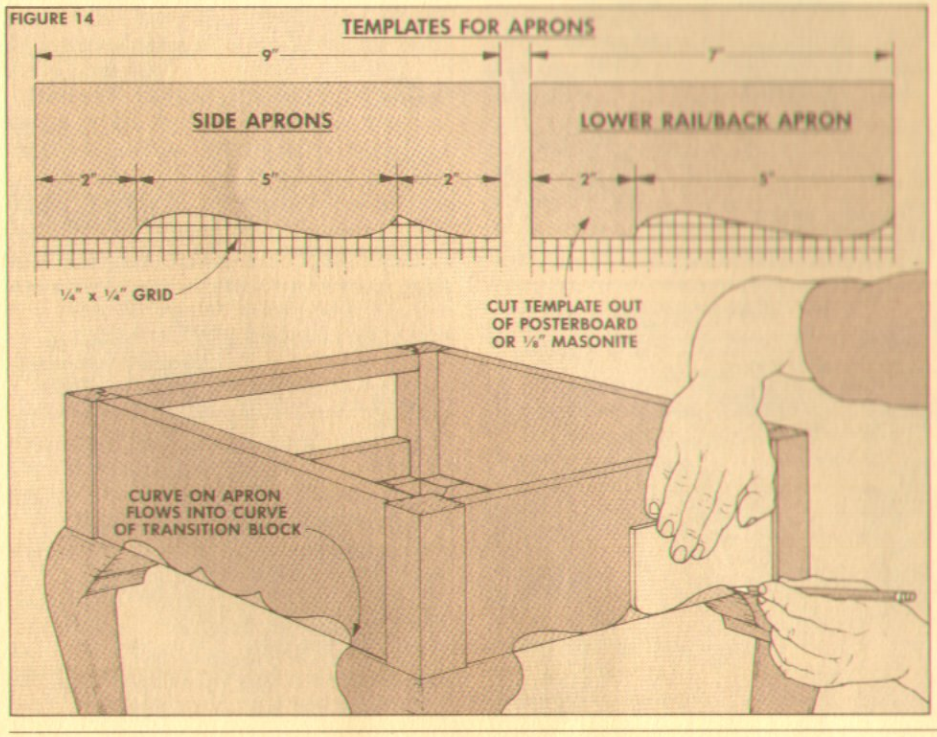

TOP DRAWER RAIL

There's one more rail to add to the table — the top drawer rail (F), see Fig. 8. I used the traditional way of mounting this piece — with a single dovetail.

Start by cutting the rail from 4/4 stock to a width of 1¾" and to a length of 15½", see Fig. 8. Then cut a single dovetail on both ends. This can be done with a back saw, or on a table saw.

CUT DOVETAIL. To make the dovetail on a table saw, first make ½"-deep shoulder cuts ¾" in from both ends, see Fig. 10. This will establish a shoulder-to-shoulder length of 14" (equal to the lower drawer rail). Then to form the dovetail, make 11° angle cuts with the rail standing on end, see Fig. 11.

CUT SOCKET. Now use the dovetail to mark the socket on the corner posts of the two front legs, see Fig. 12. Then chop out the socket with a sharp chisel, see Fig 13.

Also, pre-drill a counterbored shank hole at the center of the rail, see Fig. 8. (This hole is the same as the ones in the kicker, refer to Fig. 15.)

CABRIOLE LEGS

The basic parts of the table are complete, so now comes the fun part — cutting the cabriole legs to shape. (See the article starting on page 4.)

The basic procedure is to make the two face cuts for the corner posts first. Then glue the transition blocks to the legs. When the transition blocks are in place, bandsaw the cabriole legs to shape as described in the accompanying article. Then rasp and file them to final shape.

SHAPE THE APRONS

After the legs are shaped, dry assemble the table again to mark the curved pattern on the bottom edge of the aprons, see Fig. 14. (A full-size pattern for the aprons is included with the cabriole leg pattern, see Sources, page 24.)

Position the pattern so the curve of the apron blends into the curve of the transition block on the leg. After the pattern is marked, remove the aprons and cut them to shape on a bandsaw.

ASSEMBLY. Now the table can be assembled. I glued and clamped the side aprons to their corresponding legs first. Then I joined these two units to the back apron and the two front rails.

THE DRAWER RUNNERS

When the table is assembled, the drawer runner and kicker can be added.

The kicker (H) is mounted to the top edge of the apron. To make the kicker, cut it to a width of 1½" and to length to fit between the front leg and the back apron, see Fig. 15.

Notch out the back end of the kicker to

fit around the back corner post. But before mounting it, pre-drill *oversized* shank holes for the screws that hold the top in place, see Cross Section in Fig. 15. (The holes must be oversized to allow the solid-wood top to expand/contract.)

DRAWER RUNNERS. Next, cut the drawer runners (I) to fit between the front rail and the back apron, see Fig. 15. Both ends have to be notched to fit around the corner posts, see Step 1 in Fig. 16.

Also, rabbets are cut in the runners to guide the drawer, see Step 2 in Fig. 16. One nice way to do this is to cut the rabbet so its shoulder sticks out a hair (about 1/16") from the face of the corner post, see Fig. 17. This way the drawer side won't rub against the post, it will only rub against the shoulder of the rabbet.

After this rabbet is cut, trim off the small sliver next to the front notch, see Step 3 in Fig. 16. Then pre-drill holes for woodscrews, and fasten the runner to the aprons so the bottom of the rabbet is flush with the lower drawer rail. (Screw it in place only, don't use glue. (It has to be removed later to add the top.)

SCREW BLOCK. There's one more small piece to add. A screw block is centered on the top edge of the back apron to hold the table top in place, see Fig. 15.

THE DRAWER

The drawer is built the old-fashioned way: with half-blind dovetails on the front, and through dovetails on the back, see Fig. 18. (A complete step-by-step article on cutting through dovetails by hand is in *Woodsmith* No. 19, and an article on half-blind dovetails is in *Woodsmith* No. 22).

DRAWER FRONT. To build the drawer, start by cutting the drawer front (J) to size. The length of the front is determined by measuring the distance between the shoulders of the rabbets on the runners, less 1/16" (for clearance), plus 3/4" (for the 3/8"-wide lipped edges). The width is equal to the height of the opening, less 1/16" (for clearance), plus 3/4" (for the lipped edges).

Now cut 3/8" x 3/8" rabbets on all four edges of the drawer front. Then the pins (sockets) of the half-blind dovetail can be cut. To complete the drawer front, rout a shouldered quarter-round profile on the front face, see Detail in Fig. 18.

DRAWER SIDES. Next, cut the drawer sides (K) to size out of 1/2"-thick stock. Then cut dovetails on the ends to fit the sockets in the drawer front. Also, cut a 1/4"-wide groove for the drawer bottom (M) in the drawer front and sides, see Fig. 18.

THE BACK. Then the drawer back (L) is cut to size and joined to the two sides with through dovetails, see Fig. 20.

DRAWER BOTTOM. Finally, glue the drawer together and cut the drawer bottom (M) out of 1/4" plywood and slip it into the grooves, see Fig. 18.

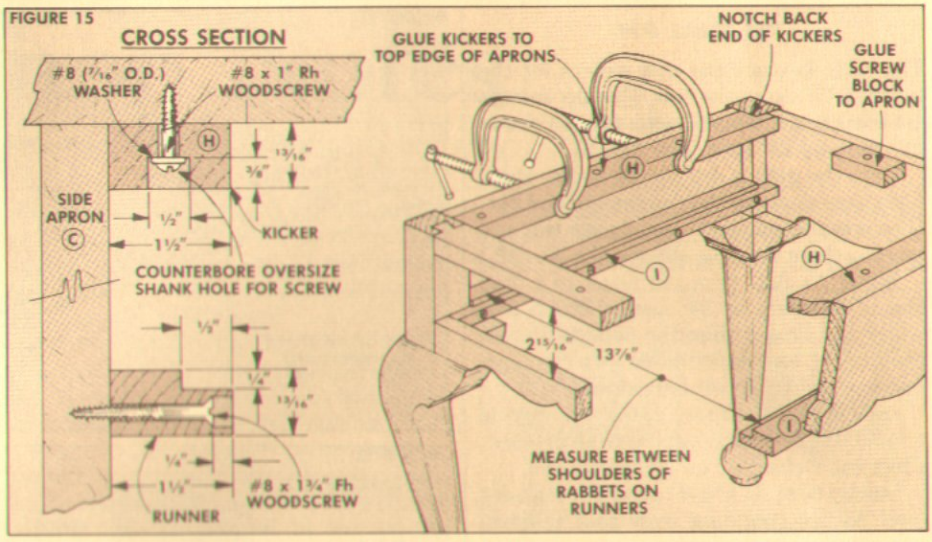

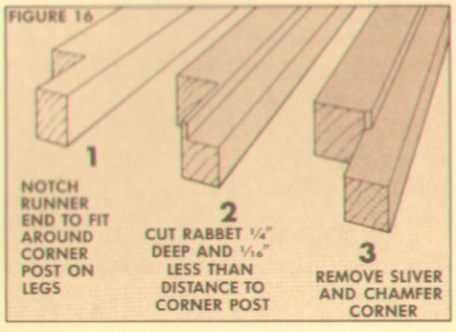

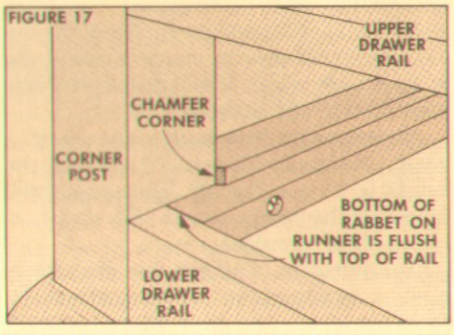

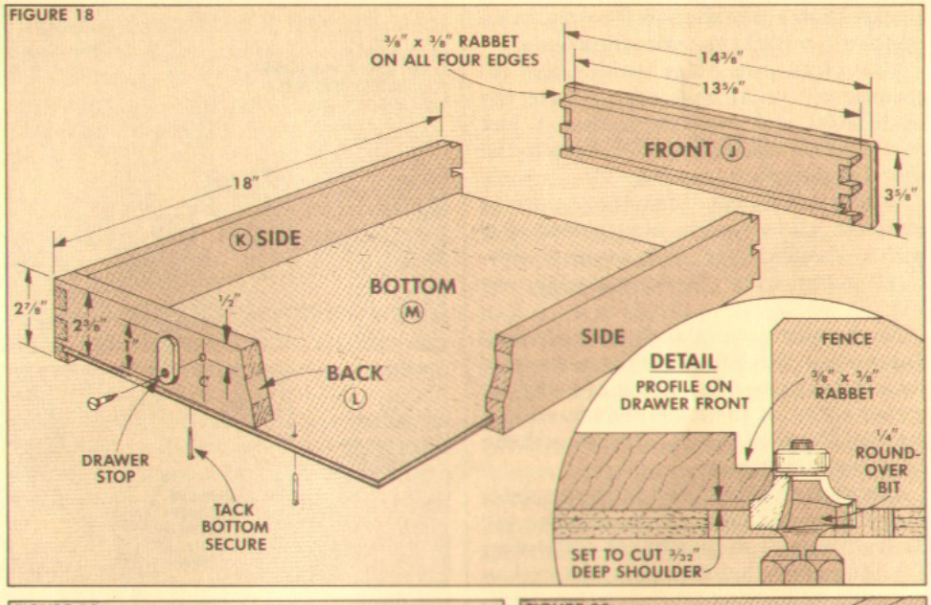

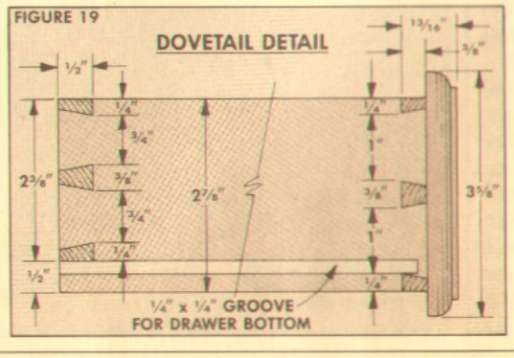

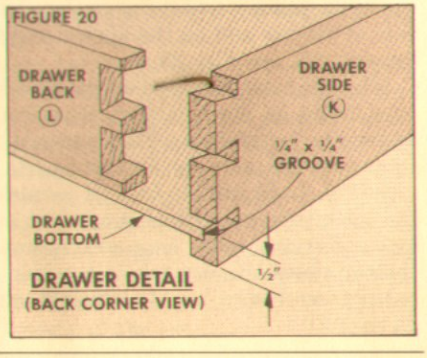

THE TABLE TOP

The table is complete now except for the top (G). To make the top, glue up enough 4/4 stock to get a blank with a rough size of 21″ wide by 25″ long, see Fig. 21.

Once the glue is dry on the blank, plane both faces down so they're smooth and flat. (For more on gluing up panels like this and planing them flat, see *Woodsmith* No. 32.)

When it's flat, trim the blank to a final size of 20″ wide by 24″ long. (This is 2½″ wider and longer than the outside dimensions of the assembled table — which produces a 1¼″ lip on all four sides.)

PROFILE THE EDGE. After the top is trimmed to final size, cut the edge profiles. First cut a chamfer on all four edges.

One tip here. It's best to cut this chamfer (and do the rounding over that follows) immediately after planing the top smooth. If you wait overnight or a few days, the top will have a chance to warp. Even if the warp is very slight, it will cause problems with cutting the chamfer.

CHAMFER CUT. Now back to the chamfer. First, tilt the saw blade to 11° and raise the height to 1″, see Fig. 22. Then adjust the fence so the blade cuts a chamfer that leaves a 3/32″ shoulder.

One more tip. Cutting this chamfer is really a rip cut on the two long sides and a cross cut on the two ends. Since you can't change blades once the saw is set up, use a combination blade to make these cuts.

SHOULDER CUT. After making the 11° chamfer cut on all four edges, reset the blade to 90° and lower the blade so it just barely cuts a square shoulder down to the chamfered surface, see Fig. 23.

ROUND THE EDGES. When the chamfer is complete, all four edges are rounded over with a ¼″ round-over bit on a router table. First, round over the bottom edge, see Fig. 24.

Next, round over the chamfered edge. Sneak up on this cut, rounding as much of the corner as possible without allowing the corner of the bit to hit the chamfered surface, see Detail in Fig. 24. Then smooth the edge with sandpaper.

MOUNT TOP. When the top is complete, mount it to the table. First, remove the drawer runners so they're not in the way. Then to ensure that the top is centered on the table, mark a centerline on the underside of the top and on the aprons and top drawer rail, see Fig. 25.

With the table centered on the top, drill pilot holes in the top, and temporarily screw the top in place. Then remove the screws so the table can be varnished.

FINISH. To finish this table, I varnished the table top and rubbed it out to a high gloss. For the table legs and aprons, I thinned down the varnish so it would be easier to work with, see the article starting on page 20.

FIGURE 21

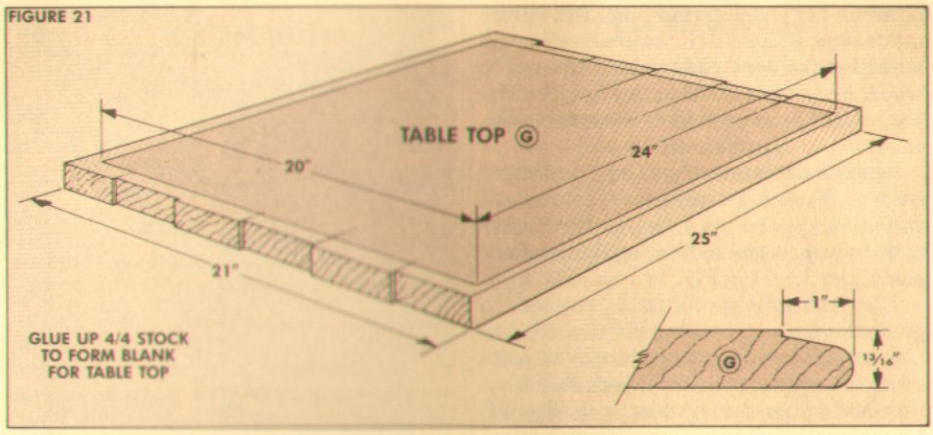

FIGURE 22

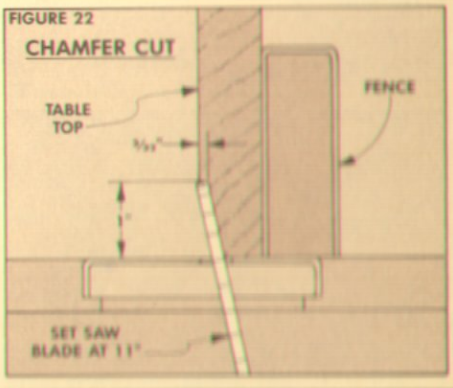

FIGURE 23

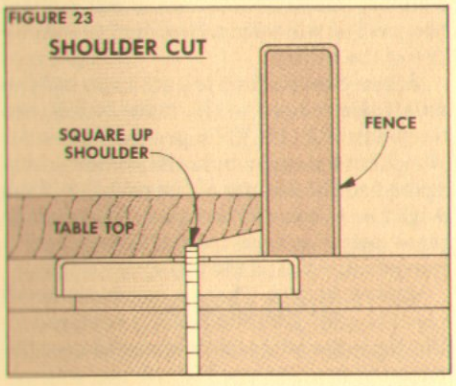

FIGURE 24

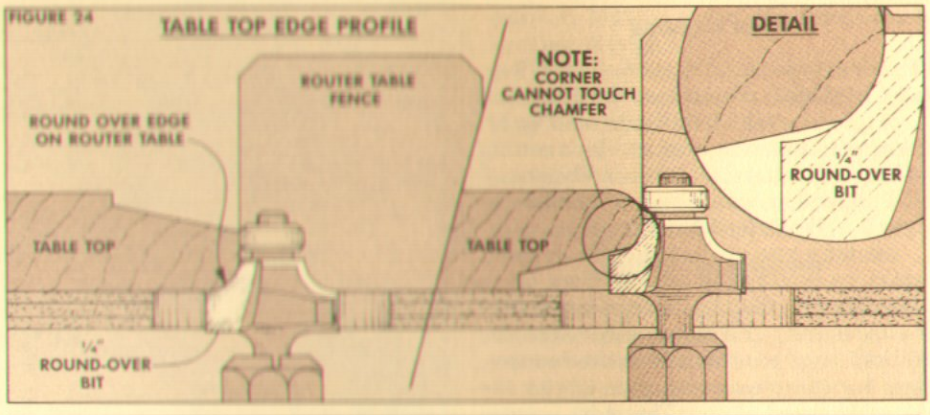

FIGURE 25

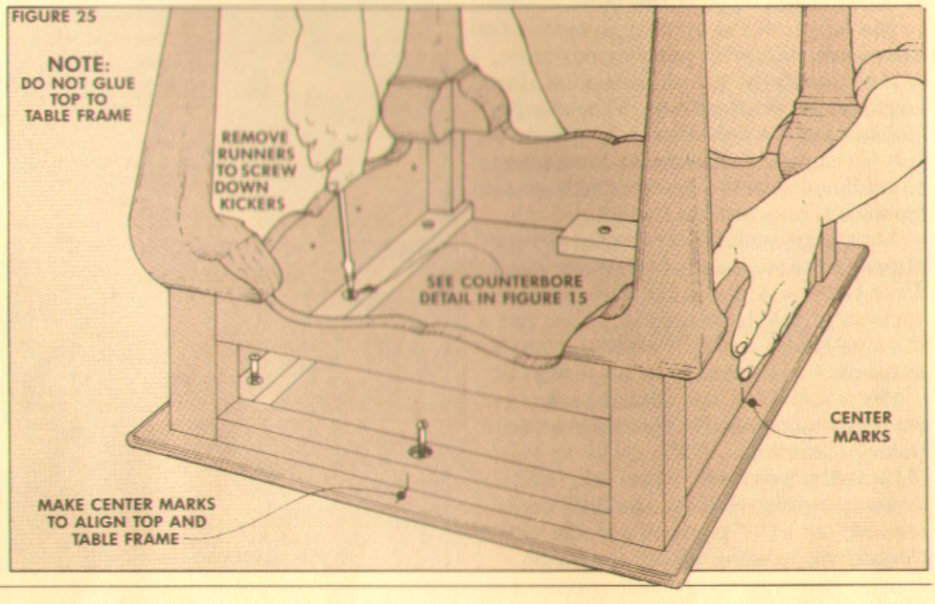

Shop Notes

SOME TIPS FROM OUR SHOP

HOLDING JIG FOR SHAPING LEGS

Shaping a cabriole leg is a lot easier than it looks. But holding it steady so it can be worked from different directions with a spokeshave, rasps, files, and sandpaper can be a problem. I solved the problem with a special holding jig.

The jig is a makeshift adaptation of a carver's "cradle." It consists of a headstock and tailstock made from a couple pieces of 2x4 and an adjustable bed made from a pipe clamp. The pipe clamp is held tight in a machinist's vise to keep it from swiveling. (Or it can be held in any vise if it's sandwiched between a couple V-blocks.)

To make the head and tailstocks begin by cutting a 2x4 into two 8"-long pieces. Next, bore a hole for the pipe clamp 1½" from one end. Then to make the stocks easier to work around, cut a curved section from the back of each piece.

To keep the tailstock from swiveling, bandsaw a kerf part-way through the 2x4. Then drill a hole through the sides for a carriage bolt and wing nut. After the jig is adjusted to hold the cabriole leg, tighten the wing nut to clamp the tailstock tight around the pipe.

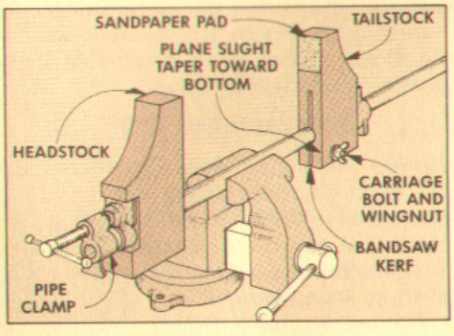

On the headstock, I chiseled out a mortise so the jaw of the pipe clamp would keep it upright.

The top of the headstock and tailstock tend to tilt back when the pipe clamp is tightened. To compensate for this, plane a slight taper on their faces. Then to provide a non-slip surface, glue sandpaper pads on the faces.

SQUARING UP LEG BLANKS

We used turning squares to make the cabriole legs in this issue (see Sources, page 24). Though they're called turning *squares*, most of them come rough-cut, and I've rarely seen one with two *square* (90°) faces over the entire length. The easiest way to square one up is with a jointer. But it can be done on a table saw.

To cut the blanks square, I built a simple jig out of a couple pieces of scrap. The purpose of the jig is to cradle the turning square and keep it from rocking and twisting while it's being ripped.

THE JIG. To make the jig, nail a piece of ⅛" Masonite at 90° to a scrap of 4/4 stock. The Masonite should be about as long as the turning square, but not quite as wide.

After the jig is nailed together, position the turning square in the *inside* corner of the jig and tack through the 4/4 scrap side into the square. (Note: Tack toward the ends where the nail holes can be cut off when cutting out the leg profiles.)

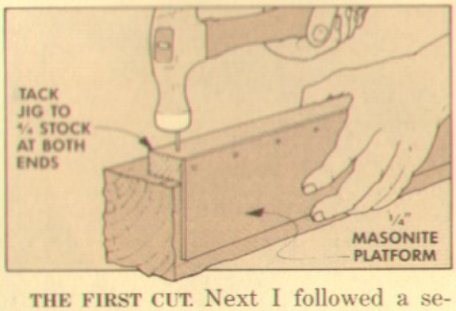

THE FIRST CUT. Next I followed a sequence of four cuts until the four sides were 90° to one another. To make the first cut, place the jig and turning square on the table saw with the jig against the rip fence, see Step 1.

Now set the fence so the blade will make a clean cut along the entire opposite face (A) of the turning square. Then cut this face in increments, raising the blade slightly after each pass.

PLANE DOWN WASTE. A 10" blade can't be raised high enough to cut all the way through a 3" thick turning square. So I removed the square from the jig, snapped off the waste, and planed down the extra lip. It's easy to plane since there's a wide flat surface to plane to.

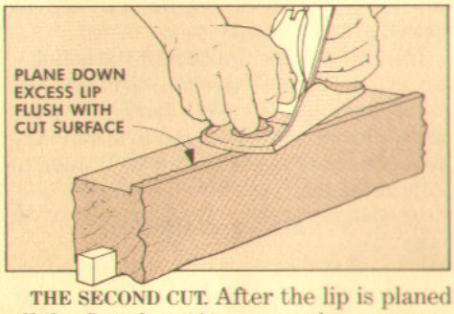

THE SECOND CUT. After the lip is planed off the first face (A), mount the square to the jig with this flat side *down* against the Masonite, and again tack through the 4/4 side. Then adjust the rip fence to cut the next surface (B), see Step 2.

Once again make the cut in increments, snap off the waste, and plane it flat. At this point two of the surfaces (A and B) should

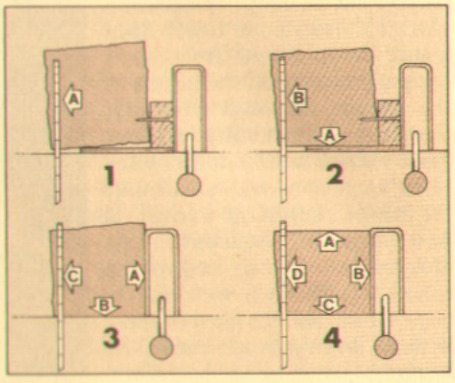

be clean and square (90°) to one another. It's a good idea to check them with a square before going any further.

THIRD CUT. To make the final two cuts, the jig won't be needed. Just set the rip fence for the finished width. Then place the first face cut (A) against the fence and the second face (B) down on the table and cut the third surface (C), see Step 3.

THE FINAL CUT. Finally, don't change the rip fence and cut the last surface (D) with the third face (C) down, see Step 4.

A CLEAN-CUT BANDSAW

When you're ready to cut cabriole legs on a bandsaw, a couple of things can be done to help the process go more smoothly.

First, start with a sharp, new blade. A ¼" regular-tooth blade with six teeth per inch worked the best for us. We tried a hook-tooth blade with four teeth per inch to speed up the cutting action, but it left a rough surface that had to be dealt with later.

When the blade is mounted, check the tension. Since the upper blade guide has to be raised quite high (especially when working around the transition blocks), the blade is not supported as much as usual. To compensate, the blade tension should be increased slightly to keep the blade cutting straight.

Most bandsaws have a tension gauge, which is really just an approximate setting. Set the tension a little greater than is indicated on the gauge. The ideal setting produces a high "twang" when it's plucked.

Also, as the cuts are made around the transition blocks, raise and then lower the blade guide to keep the gap between the guide and the workpiece as small as possible. This will improve both the quality and safety of the cut.

Finishing: Varnish

A DURABLE SURFACE WITH A TRADITIONAL LOOK

I took one look at the Queen Anne side table in this issue and thought this was the perfect project for a deep, traditional, "formal" finish. A finish that would complement its stately design and show off the beauty of the walnut, but still offer protection and durability. A clear gloss varnish would do the job.

We've neatly walked around the whole subject of varnish in past issues of *Woodsmith*. Varnish has a notoriously long drying time that allows a wet coat to collect dust, and it's hard to apply without leaving brush marks. So on most projects we've recommended oil or an oil/varnish combination. Oils are easy to rub in with a rag and they penetrate so dust isn't a problem.

The oils and oil/varnish combinations leave a smooth, dull satin finish and are great for casual, contemporary designs. But oils don't provide the depth, surface protection, and formal look of a varnish finish.

OLD-TIME VARNISHES

In the 18th and 19th centuries a perfectly smooth, high-gloss finish on a piece of furniture was a sign of quality workmanship — only the rich could afford it. The cabinetmaker's shop was filled with a variety of mysterious *natural* resins and gums collected from insects, plants, and strange materials dug up out of the ground.

These natural resins were powdered and then dissolved in an alcohol solvent distilled from wine and brandy to make a spirit varnish. Or they were combined with a natural oil to make a fixed-oil varnish. Each shop had its own secret combinations to obtain its "perfect" finish.

These old-time finishes were beautiful, but had short shelf lives and were difficult to apply. And they wouldn't stand up to the abuse expected of today's finishes.

Today's varnishes are different. They're made from endless combinations of *synthetic* (man-made) resins, oils, pigments and solvents. Unfortunately there isn't a combination that will make a universal varnish perfect for every project. If a salesperson tells you there is, you can be sure it's the one he's selling.

I've started reading labels on varnish cans and found they can be helpful in choosing the correct varnish for a specific job.

SOLIDS AND SOLVENTS

All varnishes have two basic parts — a non-volatile part (the solids) and a volatile part (a liquid solvent such as mineral spirits). The solids are the actual stuff (resins and oils) that is left on the surface after the solvent evaporates. The solvent's only purpose is to carry the solids to the surface. It doesn't offer any surface protection since it evaporates.

The amount of solids and solvents varies from one varnish to another. A varnish that's listed as having 50% solids will leave a coat twice as thick as one with 25%. And the same protection can be obtained by applying half as many coats.

The most important part of the solids is the resin. Most of today's varnishes are made from three tough *synthetic* (man-made) resins — alkyd (pronounced AL-kid), phenolic (pronounced fi-NOL-ick), or polyurethane.

ALKYD RESIN

Any varnish that's sold as a standard "oil-base varnish" is probably made from an *alkyd resin*. A chemical combination of alcohol with an acid produces this synthetic resin.

Alkyd varnishes are fairly flexible and durable but don't stand up to moisture unless tung oil has been added (and usually it's not — linseed alkyd or soya alkyd is much more common). Alkyd varnishes are the least expensive of the synthetic varnishes and are best for projects that will be kept inside and not receive a lot of abuse.

PHENOLIC RESIN

Varnishes sold as "spar," "marine," or "exterior" finishes usually contain a *phenolic resin*. But manufacturers may use the word "spar" for any clear exterior finish. For example Minwax sells a product they call "Helmsman Spar Urethane." It contains a polyurethane resin and an alkyd resin, but no phenolic resins.

Phenolic resin varnishes are more moisture resistant than alkyd. And additional chemicals (UVA's — ultraviolet absorbers) can be added to the resin to absorb damaging ultraviolet rays.

If enough tung oil has been added to the phenolic resin it turns soft and flexible — perfect for an outdoor finish. Extreme changes in humidity (sun/rain) will cause wood to swell and shrink. So a finish that isn't flexible would quickly crack.

POLYURETHANE RESIN

Patrick Devine, National Sales Manager for H. Behlen and Bros., calls *polyurethane resin* varnish "the new boy on the block that has been snubbed by serious woodworkers for years." But he feels this attitude is undeserved.

Devine explains that polyurethane resins have some excellent characteristics. (Polyurethanes are sometimes mistakenly labeled "urethanes." True urethanes are two-part systems, not commonly available to consumers.)

He says polyurethanes are "extremely durable, have very, very high gloss, and high gloss retention. They don't yellow as badly as many other varnishes and so they tend to maintain their look much longer. For the average woodworker, they're easy to apply."

A PLASTIC. Most of the problems associated with polyurethane are caused by the fact that it's a plastic resin. Some people don't like its high gloss "plastic" look. But that's more of an aesthetic concern, and the gloss can be knocked down with some 0000 steel wool.

A more realistic concern is that it's so hard, tough, and brittle that it isn't flexible. No matter what may be said about the universal uses of polyurethane, it shouldn't be used for exterior jobs.

KID-PROOF. But its toughness makes it perfect for other situations. I once built some kid's furniture. After a number of years of spilled grape juice, crayon, Magic Marker, and general whacking with a variety of blunt instruments (toys), the polyurethane is still standing strong.

MODIFICATIONS

Today's varnishes are made up of these three synthetic resins. But it's not that simple since they aren't used by themselves. They're modified. And how they're modified changes their characteristics.

It's kind of like cola. There's the basic cola taste, but then there's the New Coke, Cherry Coke, Classic Coke, Pepsi, and R.C.

An example. There isn't a straight resin varnish available on the market. It's always a resin/oil combination. And the amount of resin in the varnish might be very small.

LABELING. But here's where there's a problem. Most labels don't break down the specific amounts of a resin and the amounts of oil added to modify the material.

For example, a can of bartop varnish is listed as having maleic-phenolic resin and tung oil. But the label doesn't break this down to what percentage is phenolic resin and what percentage is tung oil. And the resin/oil ratio affects the characteristics of a varnish.

SHORT OILS VS. LONG OILS. You might hear some old-time finishers talk about "short oil" and "long oil" varnishes. *Short oil varnishes* contain less than 10 gallons of oil per 100 pounds of resin. They build up fast, have a high gloss, and are hard. Today's "bartop" and "rubbing" varnishes fall into this category.

Long oil varnishes contain more than 25 gallons of oil per 100 pounds of resin. Since oil adds flexibility, "spar" varnishes are usually long oil varnishes.

Oil is less expensive than resin, so manufacturers will often increase the oil to resin ratio with a cheaper oil to produce a less expensive product.

TYPE OF OIL. The type of oil added to the resin will also affect the characteristics. Tung oil is the toughest and most moisture resistant, but it's the most expensive. Since tung oil costs 40-45% more than linseed or soya oil, some manufacturers will use a very small percentage of tung oil for toughness and moisture resistance and then add linseed or soya oil.

This may not be all bad, though, since these other oils do have some advantages. Linseed oil yellows less than tung oil and soya oil yellows even less. And linseed oil can soften a resin if it's too hard.

MORE MODIFICATIONS. To add to the confusion, one resin can be added to modify another. For example, Defthane Satin Polyurethane contains polyurethane modified alkyd resin. (The can label reads "Defthane's higher percentage of polyurethane solids gives you better performance." But it doesn't tell what that percentage is, and how it compares to others.)

GLOSS VS. SATIN

Varnishes can be further modified by adding a pigment, usually silica. The object is to diffuse the light reflecting off the surface and obtain a satin sheen.

There are four problems with satin varnishes. First, they have to be stirred so the pigments are uniformly distributed throughout the varnish. But stirring any varnish can create air bubbles that cause problems when the varnish is applied.

Second, when silica is introduced, some of the resin has to be left out. This means a satin varnish won't be as durable.

Third, silica is just very fine sand, a contaminant. It clouds the surface and hides the grain of the wood, especially after a few coats.

Finally, the thickness of a coat of satin varnish determines the gloss. And the film thickness usually varies from the beginning to the end of a brush stroke. But these inconsistencies can't be seen until it's dry.

There are two solutions if you want a satin finish. First, only use a satin varnish as the last coat. Apply a couple coats of gloss varnish, sand well, and then apply a uniform satin top coat.

Another solution is to use a gloss varnish for all the coats. Then after it's dry, rub it with steel wool to knock down the sheen.

CONCLUSION

So what's the best varnish for a project? The problem is that there isn't a perfect combination of resins, oils, pigments, and solvents that can be universally used on all projects.

Barry Oppenheim, Technical Director for the McCloskey Corporation, says that "the proper design of a coating involves the art of compromise." Manufacturers combine different oils, resins, pigments, and solvents to meet different needs (hardness, yellowing, durability, moisture resistance, chemical resistance, sheen).

If you're shopping for varnish, be sure to know what you want it to do and then look at the ingredients. Names like "spar," "rubbing," "heirloom cabinet," "bartop," and "hand-rubbed satin" may be just catchy names used to sell products but don't necessarily indicate what's in the varnish.

A piece of furniture that's not likely to take much abuse but needs a clear (non-yellowing) rubbed finish could be finished with a linseed or soya alkyd resin varnish.

If the varnish is to be applied to a project that will be outside, it should be flexible and include a phenolic resin, tung oil, and ultraviolet absorbers.

Durable interior applications (bartops, kitchen tables) should include either a polyurethane resin or phenolic resin and perhaps tung oil.

Finally, don't be afraid to experiment. By mixing combinations of commercial varnishes, oils (tung and linseed), and solvents, you might come up with a mixture that has just the appearance, protection, and ease of application you need.

BRUSHES... *foam or bristle?*

Every finishing book or article I've ever read stresses the importance of using a high quality brush. By "high quality" the author usually means a natural bristle brush, something in the range of $10-$25. Finishers argue about the value of different natural bristles (from Chinese hog to civet cat or even camel hair — which doesn't even come from a camel, but from the tail of Russian squirrels).

Barry Oppenheim of the McCloskey Corporation says, "There's a cult that's developed over selecting the correct brush. I think a decent quality brush is fine. It doesn't have to be the best the store can import from China."

I go a step further — and this flies in the face of tradition. I use a cheap polyfoam brush for applying varnish. The advantages: no brush marks, minimal air bubbles, and a smooth, even coat.

But that's not all, they're cheap and completely disposable. If I were to spend $20 for a natural bristle brush, I'd want to make sure I was going to get my money's worth. And the only way to do that is to thoroughly clean it after every use (with a lot of expensive solvents).

Polyfoam brushes cost 39¢ to 79¢ and can be thrown away after each coat. Forty disposable polyfoam brushes would equal about one quality natural bristle brush. (And I'd hate to see what that brush would look like after forty application/cleaning sessions in our shop.)

I can only find two problems with polyfoam brushes: First, they're not the best for spindles or moldings. A polyfoam brush absorbs too much varnish and deposits it heavily into crevices.

And second, polyfoam brushes shouldn't be used with lacquer or shellac since the solvents in these will dissolve the foam. They're great for varnishes, just don't use them with any finish that uses lacquer thinner as a solvent.

Applying Varnish

HOW TO GET THE FINISH YOU WANT

After choosing the correct varnish for a specific job (see p. 20), the real work begins. Varnish is the most difficult clear finish to apply. It runs, sags, collects dust, shows brush marks, and is difficult to repair. But sometimes — when you want a durable, deep finish — it's the best choice, and you have to work with the problems.

ROOM CONDITIONS

Many of the problems associated with applying varnish can be eliminated by controlling the dust floating in the air. And in our shop, that's a challenge.

PREPARE THE ROOM. Instead, find an empty room that doesn't have a lot of traffic. The day before varnishing, dust the entire room, mop the floor, and then let any dust settle back down overnight.

TEMPERATURE. A cold garage or basement isn't the best place to varnish — the varnish may never dry. Neither is a hot garage on a summer day — it dries too fast leaving brush marks. The best conditions are about seventy to eighty degrees with low relative humidity.

Finally, don't bring a project from a cool basement into a warm room and immediately varnish it. The air in each of the wood cells will expand and be released into the wet varnish creating a million little bubbles on the surface.

WOOD SURFACE

The quality of the final finish will be only as good as the surface of the wood. Be sure it's flat, smooth, and any excess glue is removed (see article on surface preparation in *Woodsmith* No. 38). Make sure there's no oil (from fingerprints), wax, or dirt on the surface. I wipe the entire surface with naphtha before varnishing.

SEAL END GRAIN. If I'm filling the pores of an open-grained wood with a colored paste wood filler (see *Woodsmith* No. 39) or using a stain (see *Woodsmith* No. 40), I brush a 50/50 coat of thinned varnish on all the end grain *before* filling or staining. This keeps the porous end grain from absorbing the color of the stain or filler and turning too dark. On the side table shown in this issue, the ends of the table top and the entire legs (since they're mostly end grain) were given a 50/50 coat of thinned varnish before being filled, see Fig. 1.

FILL OR STAIN. Next, apply the paste wood filler (see Fig. 2) or stain, wipe off according to the directions, and then allow the project to dry overnight. If using paste wood filler, lightly sand, and right before varnishing wipe it with a tack rag.

SEALING

After filling or staining, the next step is sealing with a wash coat of thinned varnish or a varnish sanding sealer. The sealer will dry quickly and keep the top coats from penetrating into the wood, see Fig. 3.

Note: Sanding sealers contain zinc stearate, a lubricant. Many varnishes, especially polyurethane, won't stick to it. It's a problem when the fine white dust created by sanding the sanding sealer isn't all wiped off before varnishing. Instead of sanding sealer, I usually use a thin wash coat of varnish as a sealer.

THINNING. I used to always thin 50/50 to make the wash coat. But then I realized that this makes a very different sealer depending on what varnish I start with. If the varnish has only 25% solids, thinning it 50/50 reduces it to about 13% solids. Another varnish that's 50% solids thinned 50/50 reduces it to 25% solids.

A FORMULA. So what's the best percentage of solids for a wash coat? I thin to about 30% solids for softwoods and 25% for hardwoods. To determine the amount of solvent needed to obtain the correct percentage, subtract the desired percentage from the percentage of the solids in the varnish. Then divide this figure by the desired percentage.

For example, if a varnish has 44% solids and you want to thin it for hardwoods (desired percentage = 25%): 44 - 25 = 19. Divide 19 by 25 and the result is .76. Add 76% of a quart of mineral spirits to one quart of the varnish.

A DIFFERENT APPROACH. Pat Devine of H. Behlen and Bros. takes a different approach to thinning. He starts with a first coat that's only thinned about 5-10%. This makes sense when sealing over stain where there's the fear of cutting through the varnish while sanding between coats.

Devine says, "I thin my first coat less than any. I want to build quickly and spend the most time sanding the first coat. As I get closer to the finishing coat, I add a little bit more thinner to get a better flow-out."

BRUSHING ON

After the varnish is thinned to the desired consistency, strain *just what's needed* for one coat through a paint strainer or old nylon stocking into a wide, clean dish. And then work out of the dish.

Never brush straight from a can of varnish (even the full-strength coats) since any dust on the wood will get back into the can and contaminate it. And never wipe a brush across the rim of a dish or can. The rim builds up with hardened varnish and the brush carries this crud to the workpiece.

STIRRING. One other thing before brushing. *Don't* stir or shake gloss varnish. It adds air bubbles. (Satin varnish should be stirred very slowly before and during use to uniformly distribute the silica).

BRUSHING TECHNIQUE. Now the varnish is ready to be brushed on. Most old-time finishers brush on a heavy coat with the grain, work it in across the grain, and then "tip off" with the grain.

This brushing pattern probably goes back to the days when the resins were natural and the solvent was pure turpentine. They dried slowly and there was time to work out brush marks. But today's synthetic resins and mineral spirits dry quickly so they should be applied only *with the grain*. Using a checkerboard pattern invites cross-grain brush marks.

Barry Oppenheim of the McCloskey Corporation, says "People inexperienced with varnish like to brush a lot. They brush one way and then they cross brush and then they brush again.

"With every pass of the brush those bristles are working air into the film. Solvent is evaporating and the viscosity is increasing at a great rate. As the viscosity increases it makes it more and more difficult for the bubbles to release. We refer to that as working it hard."

PLAN OF ATTACK

Before brushing, it's a good idea to plan your approach. On the side table, I finished the top and leg/drawer units separately.

The top received four coats of full strength Behlen's 4-Hour Rubbing Varnish on top of the wash coat. The legs received five thinned (50/50) coats of the Behlen's varnish. (Though five thinned coats equals 2½ full-strength coats, the top needs more protection than the legs.) The thinned coats seemed to flow better on the curved surfaces and didn't build up in tight corners. (Note: I finished the entire footstool with five thinned coats.)

TABLE TOP. On the top, finish the underside first. (I always put the same number of coats on both sides even if the underside won't be seen. It helps prevent warp by maintaining a balanced panel.)

LEG/DRAWER UNIT. On the leg/drawer unit, work from the top sections down. This keeps any drops of varnish from dribbling down on a finished surface.

LOOK FOR PROBLEMS. While brushing, check for problems such as runs, hairs,

brush marks, and missed spots ("holidays") with a trouble light, see Fig. 4.

RUNS, SAGS. Runs and sags can sometimes be rubbed flat with some mineral spirits on the end of a finger, but only if the run is still wet, see Fig. 6. If a run starts to set, allow it to dry completely and then scrape it flat with a cabinet scraper.

DUST UMBRELLA. Even though I start by creating a fairly dust-free environment, it never fails — I just finish putting on a coat of varnish and the forced air furnace kicks on and dust comes flying out every heating vent. So after I apply a coat, I very gently support a dust umbrella a couple inches above the surface, see Fig. 5.

BETWEEN COATS

After each coat of varnish has dried thoroughly (usually overnight), move the project out of the dust-free area and sand the flat surfaces with 220-280 grit sandpaper and a block.

If the varnish gums up in little balls while sanding, it's not completely dry. Even if it's dry, it's normal for some clogging or flaking to occur when sanding. When this happens, I fleck the clogged flakes off the sandpaper with a pocketknife.

For round surfaces such as moldings, spindles, and the cabriole legs on the end table, I use 000 steel wool, see Fig. 7.

AN EXCEPTION. For most varnishes, all this sanding should take place after the varnish has dried overnight. But there's an exception — polyurethane. It's so hard and smooth that a second coat may not stick once the first coat is completely dry. A separation or peeling of layers can occur.

And this may not happen right away. I used polyurethane on a kitchen table once and two years later my kids found it was a great after-dinner activity to slowly peel it off, layer by layer.

A SENSITIVE WINDOW. Most polyurethane varnish cans list a "sensitive window" or period of time for applying the second and remaining coats. It's often 8-12 hours after applying the first coat.

So what do you do if you miss the sensitive window? Aggressively sand the previous coat with 180 or 200 grit sandpaper. Don't miss any spots. The sanding gives the surface some bite for the next layer.

MORE COATS AND RUBBING

I usually apply a minimum of 2-3 coats of varnish and maybe even 4-6 coats for a table top that's to be hand rubbed.

After the final coat is dry (usually overnight), but *before* it cures (curing may take as much as two weeks), rub out the top coat with fine abrasives. On the top of the side table I used 600 grit wet-or-dry sandpaper followed by pumice and then rottenstone. On the leg/apron unit I used 0000 steel wool and wax. (For more on how to rub out a finish, see *Woodsmith* No. 42).

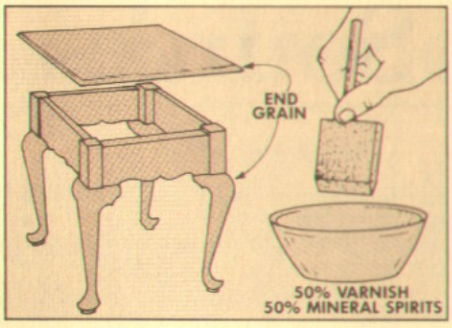

1 *Seal end grain with a 50/50 mixture of varnish and mineral spirits before staining or using paste wood filler. Sealing keeps end grain from turning too dark.*

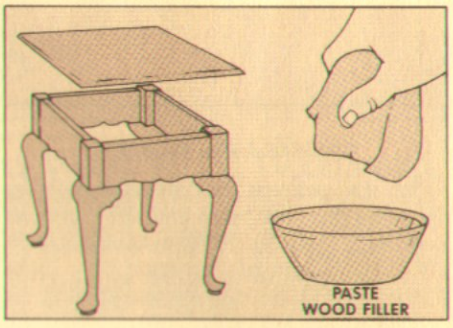

2 *Apply paste wood filler if using an open-grained wood. Wipe on with the grain and wipe off across the grain. After it's dry, lightly sand surfaces flat.*

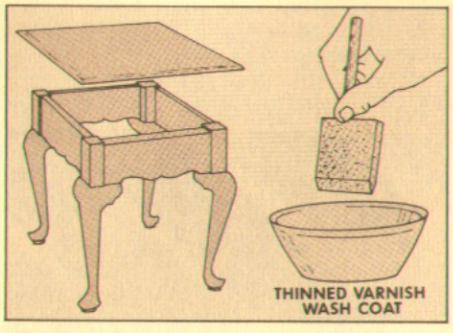

3 *Seal the entire surface with wash coat of thinned varnish. Finish off with four coats of full-strength varnish on top and five coats of thinned varnish on legs.*

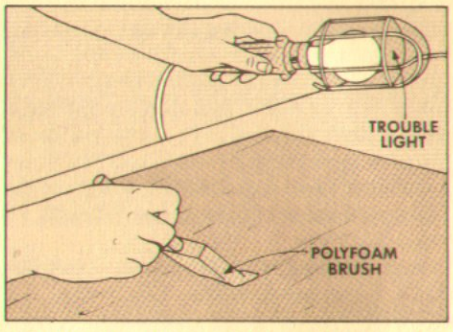

4 *Brush with a polyfoam brush in the direction of the grain to prevent brush marks. Check for problems by holding a trouble light at a low angle behind work.*

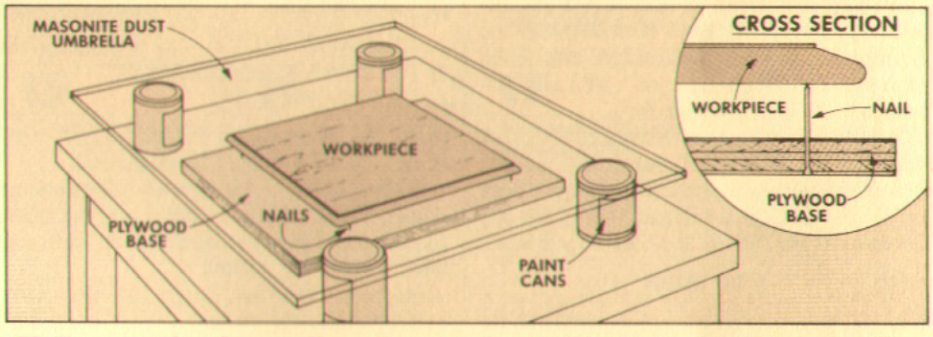

5 *To prevent dust from settling onto wet surface, build a dust umbrella by supporting a piece of Masonite on some paint cans over the workpiece. Both sides of the workpiece can be finished at the same time by finishing the bottom first, flipping it over, and gently placing on a bed of nails. Then finish the top surface.*

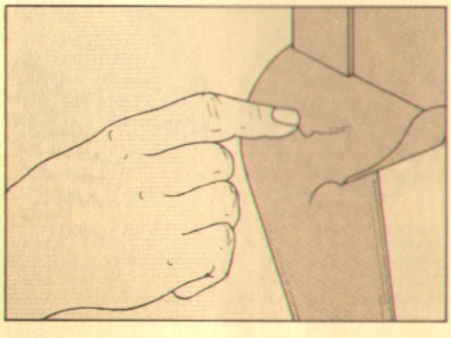

6 *Rub out runs and sags while they're still wet with a little mineral spirits on a fingertip. Use a sharp cabinet scraper if the run has dried hard.*

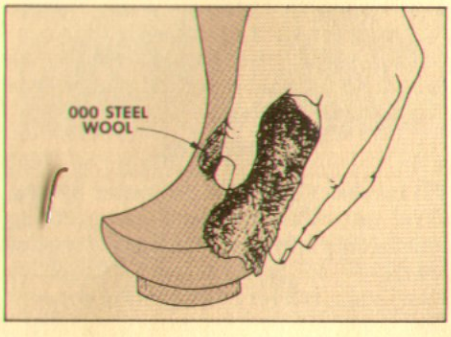

7 *Smooth round surfaces of cabriole legs between coats with 000 steel wool. Be careful not to rub through the varnish on the sharp corners and edges.*

Sources

CABRIOLE LEG PATTERN

A full-size pattern that includes both leg sizes (for the side table and the footstool) and the aprons for the side table is available free of charge. Send for *Woodsmith* Pattern CL43. Send name and address to:

WOODSMITH PATTERN, Dept. CL43, 2200 Grand Avenue, Des Moines, IA 50312.

SQUARES FOR CABRIOLE LEGS

We made the cabriole legs for the side table and the footstool from walnut turning squares. Each long leg (for the side table) requires a square that's 2¾" x 2¾" x 28" (including the two transition blocks). Each short leg (for the footstool) requires a square that's 2½" x 2½" x 16" (including the two transition blocks). You can order turning squares from the following sources (all prices are for walnut, see catalogs for other species):

BOB MORGAN WOODWORKING SUPPLIES, 1123 Bardstown Road, Louisville, KY 40204; 502-456-2545 (Catalog: $1.00). Rough cut (finished piece will be approximately ⅜" smaller). 3½" x 3½" x 32", $19.49 each; 3" x 3" x 16", $6.22 each.

ALBERT CONSTANTINE AND SON, INC., 2050 Eastchester Road, Bronx, NY 10461-2297; 800-223-8087 (Catalog: $1.00). Squares (with two sides rough, two sides planed), 3" x 3", in 12", 18", 24", and 36" lengths, $8.75 per linear foot.

THE WOODWORKERS' STORE, 21801 Industrial Boulevard, Rogers, MN 55374; 612-428-2199 (Catalog: $2.00). Rough, sold by the linear inch, will cut to any length between 6" and 48". 3" x 3", $1.10 per inch.

SIDE TABLE

You can order the cast brass drawer handle for the side table from:

GARRETT WADE COMPANY, 161 Avenue of the Americas, New York, NY 10013; 800-221-2942 (Classic Hardware Catalog: $1.00). Smooth Face Cast Plate Handle, 3", Order No. A31.01, $5.50.

The leg and apron patterns for the side table are available free of charge from *Woodsmith* (see above).

FOOTSTOOL

We purchased the 3 oz. polyester batting, the 1" cotton batting, the 1" foam padding, and the fabric from a local fabric store that carries upholstery supplies. These are standard upholstery items, but if you can't find them at a fabric store, try asking a local upholsterer.

The leg pattern for the footstool is available free of charge from *Woodsmith* (see above).

RASPS AND WOOD FILES

While I was making the cabriole legs for this issue, I used a family of hand tools designed especially for shaping compound contours: rasps and wood files.

THE BASIC DIFFERENCE. Rasps and files look similar, but they're distinctly different tools in the way they cut and the surface they leave behind. A rasp takes off a lot of wood in a hurry, but leaves a rough, fuzzy surface. A file cuts slowly, but leaves a surface smoother than 60-grit sandpaper.

The different work surfaces left by these tools result from the design of the cutting surfaces on the rasps and files, see photo. A rasp has true teeth. Each tooth is raised

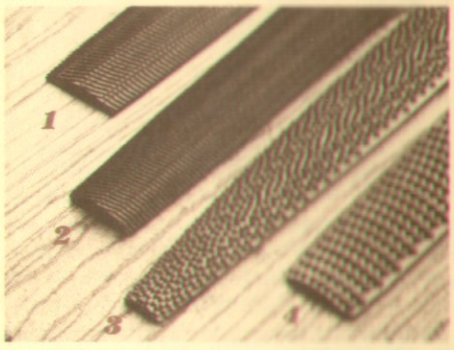

1) CABINET FILE 2) WOOD FILE
3) PATTERNMAKERS RASP
4) CABINET RASP

from the base stock separate from the others. It cuts with a tearing action.

The teeth on a file are actually cutting edges. These edges are the ridges between the diagonal grooves on the file. They cut with a shearing action.

SO MANY CHOICES. Rasps and files come in a bewildering variety of shapes, sizes, and types. To complicate the issue, different manufacturers call the same basic tool by different names. So, you have to shop by general characteristics.

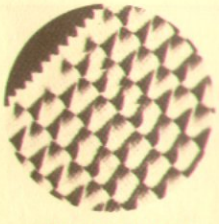

CABINET OR WOOD RASP

PATTERN-MAKERS RASP

RASPS. Rasps are available as wood rasps, cabinet rasps, and patternmakers rasps. Cabinet rasps and wood rasps are similar in that their teeth are lined up in rows, see left photo. The basic difference is that the cabinet rasp is thinner.

The patternmakers rasp, however, is unique. Its tip tapers more than that of wood and cabinet rasps. And, its teeth are spread randomly over the surface, see right photo.

Since the teeth on a cabinet or wood rasp are lined up, it seems to want to set its own course. And it leaves a trail of grooves behind. These grooves have to be filed out before sanding can begin.

Since the teeth on the patternmakers rasp aren't lined up, it's easier to control than a wood or cabinet rasp. It also cuts faster and smoother. Using it feels like sanding. You set its course without worrying about a trail of grooves to clean up.

The patternmakers rasp has a drawback — it costs more than twice as much as a wood rasp. But, it's worth it. We recommend a 10" Nicholson #49.

FILES. The ideal file for a project like the cabriole leg is what's usually called a cabinet file. These are commonly available in 8" and 10" lengths.

The basic difference between a cabinet file and a wood file is that the cabinet file is a little thinner. But any ordinary half-round file in bastard cut will work fine.

Note: Files generally are available in three degrees of cut — smooth, second-cut, and bastard. Bastard is the one for woodworking because it's the coarsest.

The coarseness is also affected by file length. The longer the file, the coarser the cut. So a 10" bastard file is coarser than an 8" bastard.

Rasps and wood files are available from:

WOODCRAFT SUPPLY CORP., 41 Atlantic Ave., Dept. WS26, P.O. Box 4000, Woburn, MA 01888; 800-225-1153 (Catalog: Free).

GARRETT WADE COMPANY, (address above), General catalog: $3.00.

VARNISH

We ordered the finishing supplies for the side table and footstool from:

WOOD FINISHING SUPPLY CO., INC., 1267 Mary Drive, Macedon, NY 14502; 315-986-4517 (Catalog: $2.50). *Behlen's Pore-O-Pac Paste Wood Filler*, medium brown walnut, Order No. B744-1F156, $9.30 per quart. *Behlen's 4 Hour Rubbing Varnish*, Order No. B603-27106, $10.20 per quart.

Behlen varnishes and rubbing supplies are also available from Garrett Wade Company (see address above).

Special thanks go to Pat Devine of H. Behlen and Bros. and Barry Oppenheim of The McCloskey Corporation. Both have extensive finishing experience and were helpful in supplying technical and practical information for the article on varnish.

Index of Contents No. 1-42

This index covers all of the articles (including projects and techniques) contained in the first 42 issues of *Woodsmith*.

We've divided this index into two sections. The first section is a general catalog of woodworking topics, techniques, tips, tools, joinery, jigs, and finishes. The next section is a list of all the projects shown in the first 42 issues of *Woodsmith*.

The numbers following each listing refer to the issue and pages where you can find information on the listed subject. For example, 20:4-7 refers to information in *Woodsmith* issue No. 20 on pages 4 through 7.

GENERAL INDEX

Adhesives
- Hide (Scotch) 19:23
- Hot melt 34:24
- Waterproof 3:7,11; 16:10; 27:8

Alcohol soluble dyes 40:21-22,24
Angle
- Cutting odd 20:23
- Drilling 4:10; 35:22

Angled box joint 35:15
Angled half-lap joint 39:4
Artists' oils 39:22,24 40:23
Band saw
- Blade 10:3
- Cutting duplicates 23:3

Bare-faced dado 40:12
Bead cutting jig 16:3
Beam compass 38:4; 40:14
Belt sander 15:7; 10:10; 35:22
Bench hook 38:3
Bevel/rip 16:8; 18:3; 25:8-9
Bits
- Forstner 40:4-5,24
- Mortising 26:20-21,24
- Panel raising 40:18,24
- Rabbet 36:21; 38:23
- Router 37:19-21,24

Blackboard paint 41:24
Blind dado 38:3
Blind dovetail 12:7
Books, woodworking/finishing 31:23; 38:24; 40:24
Boring jig, horizontal 12:13
Box joint 2:4-5; 17:12-13; 35:12-20; 41:8-9; 42:6,10-20
- Cleaning up 42:20
- Cutting on router table 42:17,18
- Drawers 17:19
- Jig 2:4; 35:14-15; 42:16-17
- Rabbeted 17:19

Branding irons 10:3
Brushes, cleaning 39:3
Bullet catch 19:12,17
Burns, removing from wood 38:21
Cabinet scraper 14:12-13; 15:7; 39:11-13,24
Carbide-tip
- Router bit 21:8-9; 23:23; 37:19-21
- Table saw blades 27:16-21,24; 28:19,23

Carpenter's triangle 1:6; 15:6
Carpet tape 35:23; 42:3,8,24
Carving 32:4-6,24
- Pattern for card holder 35:20
- Pattern for quilt rack 32:24
- Reference books 32:24
- Tools 32:24

Child-safe finish 26:23
Chisel 19:5; 20:8-11; 25:3
Circle cutter, adjustable 33:18-19
Circles, routing 20:13; 21:10-11
Clamping
- Block, dovetail 32:23
- Blocks on edge 42:3,19
- Boards 31:3; 35:3
- Corners 34:3
- Long pieces 34:24; 36:3
- Table top 15:7, 17:3

Clamps
- Hand screws 15:7; 28:3
- Hold-down 1:6
- Pipe 15:3,7; 28:3; 32:15; 36:3
- Wedge 5:3

Clubs
- Woodworking (issues 27-33, 35-38,40:page 24)
- Organizational help 37:24

Color coding tools 37:3
Coloring wood 40:19-22
Compass 7:3; 26:3; 38:4; 40:14
Compound miters 36:21
Corner
- Joint, plywood 22:3; 33:20-22
- Template 29:3

Cove cutting 12:16; 20:23; 36:11; 37:23
Cut-off jig, radial arm saw 22:3
Dado blade
- Adjustable 17:20; 23:23; 34:22
- Problems 42:20

Danish oil finishes 30:12-15
Dentil 26:12-19,22; 29:3; 31:3; 36:3
Dents 15:3; 38:20
Diamond sharpening stones 24:7
Door
- Caned-panel 22:18-22
- Glass 13:8-9; 22:18-22; 24:9; 25:19; 26:15-17; 29:19-20; 33:15,24; 36:14,16-19; 38:11
- Hinges 13:8-9; 25:19
- Louvered 37:10-13
- Muntins 13:8-9
- Raised-panel 2:10-11; 18:4-19; 24:14-17
- Techniques 13:8-9; 29:20-21

Dovetail
- Blind 12:7
- Clamping block 32:23
- Drawers 19:15-18
- Fixtures 22:6-10; 23:3; 27:3; 32:22
- Groove 11:6-7
- Half-blind 22:4-9; 34:4-9
- Hand-cut lap 22:4-5; 23:3
- Hand-cut through 19:6-11
- Key 31:4-9
- *Leigh* dovetail jig 32:22,24
- Machine-cut lap 22:6-9
- Machine-cut through 32:22
- Rabbeted 21:3
- Routed 22:6-9; 32:22,24
- Saws 19:5

Dovetail, *cont.*
- Sliding 31:4-11
- Through 12:7; 19:6-11
- Tongue and groove 9:7; 20:20-22,24; 31:4-9,20-22; 38:16; 40:18

Dowel centers 37:18
Doweling jig 41:4,24
Dowels
- Chamfering 10:3
- Cutting 16:3
- Drilling 33:3; 34:3
- Grooved 16:3
- Making 19:3; 39:16-17; 42:3
- Sanding 9:12
- Uses 24:23; 29:16-21; 30:2; 39:5,9,15; 41:20-21

Drawer
- Construction 17:19; 18:20-22; 19:18; 22:6-9; 31:20-22; 32:18-21; 33:16; 34:13-15; 38:10-16; 40:18; 41:8-9; 42:13-14,18-19
- Divider system 42:15,19
- Plywood 22:14-15
- Routed front 21:3; 40:18
- Stops 40:18

Drill bits 32:23
Drill guide, *Portalign* 12:3,13
Drill press
- Adjustment wrench 32:3
- Collet chuck 12:3; 26:23
- Guide 1:6
- Hole boring jig 22:3
- Mortises 18:23
- Mortising bits 26:20-21
- *Pressmate* table elevator 16:20
- Router chuck 12:3
- Table support 19:3

Drilling
- Angle 4:10, 35:22
- Circles 33:18-19
- Dowels 33:3; 34:3
- *Shopsmith* Mark V 29:3

Drop-leaf
- Hinge 11:10; 14:8
- Joint 11:10; 14:7-8

Drum sander 35:22; 38:3,6; 41:16-17
Dust masks 40:23
Edge gluing 32:13-15; 35:23
Ellipse 5:8; 14:3; 16:3; 19:3; 24:3
End boards 9:7; 20:24; 23:13;
End grain
- Gluing 24:23; 37:23; 41:12
- Sealing 9:3; 40:22

Featherboards 33:23; 40:3,6
Filler
- Nail hole 15:3
- Paste wood 39:21-22,24; 42:21
- Putties 38:21,24
- Sawdust glue/finish 17:3; 38:21

Finger joint 17:14-15; 35:18-20; 42:10-20
Finishes/finishing techniques
- Books 38:24; 40:24
- Cleaning brushes 39:3
- Dyes 40:20-22,24
- High gloss 42:23
- *Minwax Wood Finish* 40:19-22,24

Finishes, *cont.*
- Non-toxic 19:23; 25:23; 28:24; 32:12,24; 36:23
- Oil 30:12-15,24; 31:23,24; 32:7-9,24; 36:23; 39:24
- Outdoor 27:14-15; 39:24
- Paste wax 42:23
- Paste wood fillers 39:21-22,24; 42:21
- Pigments, Japan colors/artists' oils 39:22-24; 40:23
- Rubbing 14:9; 42:21-23,24
- Satin 14:9; 42:23
- Sealers 39:22,24; 40:22
- Spar varnish 39:24
- Stains 40:19-22,23,24
- *Sutherland Welles* tung oil 30:14-15,24; 32:7-9,24; 36:23; 39:24
- Turning 25:23
- Wash coat 39:22

Forest Products Laboratory 36:24
Formica plastic laminate 31:8-9; 33:3; 37:6,24; 39:14; 41:10,24
Forstner bits, sharpening 40:4-5,24
Frame
- Gluing 26:11; 30:9
- Mitered 33:18-19
- Molded edge 24:8-17,20-22; 29:20-21; 30:4-8
- Mortise and tenon 26:7-11
- Octagonal 12:8-9; 21:4-7
- Rabbet routing 26:22
- Web construction 8:8-11; 14:10-11; 22:18-22; 24:14-17; 25:14-17; 26:12-17; 29:4-21; 31:4-9; 34:4-9,16-19

Frame and panel construction 8:6,8-11; 16:12-15; 18:4-19; 24:14-17,20-22; 29:4-22; 34:10-12; 36:4-10; 39:8-9; 41:7
Full through dado 40:12
Gelled stain 40:21-22,24
Glass
- Cutting 13:16; 17:20
- Door 13:8-9; 22:18-22; 24:9; 25:19; 26:15-17; 29:19-20; 33:15,24; 36:14,16-19; 38:11
- Mounting 11:3
- Sanding 13:3

Glue, hot-melt 34:24
Gluing 7:3; 9:3; 10:3,9; 15:7; 17:4-5; 18:3; 19:23; 20:23; 21:9; 23:22; 24:23; 26:11; 27:23; 28:9,24; 31:3; 32:10,13-15,23; 37:23; 38:20; 40:7; 41:12
- Edge 32:13-15; 38:20
- End grain 24:23; 37:23; 41:12
- Excess glue 38:20
- Frame 26:11; 30:9
- Inlay 28:9
- Miters 21:9; 30:9
- Stains 33:23
- Tambours 17:4-5

Grinder tool rest 20:7; 24:3
Grinding wheels 20:4-6,12; 23:23
Guide bushing, router 37:11; 42:4-5,24
Half-blind dovetail 22:4-9; 34:4-9

Half-lap 1:4,7,8; 2:11; 15:8-11; 16:6-7; 22:18-22; 27:4-13,22; 29:23; 39:4
Handles 42:12
Hand-cut dovetails 22:4-5; 23:3
Hand-rubbed finish 14:9, 42:21-23,24
Hand scrapers 14:12-13; 15:7; 39:11-13,24
Hand screws 15:7; 28:3
Hexagon 12:10-11,14; 16:8-9; 18:3; 40:8,10-11
Hinges
  Butler's tray table 14:16; 16:3; 20:23
  Drop-leaf 11:10; 14:8
  Glass door 25:19; 33:15,24; 38:10,24
  Knife 13:8-9
  Locating on cabinet 37:3; 42:8-9
  Mortises 32:22; 37:17; 42:6-7,12
  Roto-Hinges 37:4,24
  Wooden (issue 9)
Horizontal boring jig 12:13
Hot-melt glue sheets 34:24
Icebox hardware 36:24
Inlay 20:17; 26:6,22; 28:8-15,24
Jack plane 15:7; 23:16-17,20-21
Japan colors 39:22,24; 40:23
Japanese water stones 24:4-6; 26:23; 31:23
Jig
  Angle drilling 4:10; 35:22; 37:3
  Bead cutting 16:3
  Box joint 2:4; 17:12-13; 35:12-20; 42:16-17,20
  Burnishing a scraper 39:12-13
  Cleaning up box joints 42:20
  Cove cutting 12:16; 36:11
  Cutting plastic laminate 33:3
  Cut-off 15:15-16; 28:3
  Dentil molding 26:22; 29:3
  Depth gauge 31:3
  Dowel making 19:3; 39:16-17; 42:3
  Doweling 41:4,24
  Drilling 22:3; 25:3; 33:3
  Featherboards 33:23; 40:3,6
  Finger joint 17:14-15; 35:18-20; 42:16-17,20
  Horizontal boring 12:13
  Kerfing dowels 39:15
  Louvered doors 37:10-12
  Miter 12:15; 24:12-13; 36:22; 38:3
  Mitering small stock 40:3
  Mortise cutting 16:18; 26:9
  Octagonal frame cutting 21:17
  Open-spline miter 36:22; 39:15,19
  Panel cutting 8:12; 18:23; 22:11; 25:13
  Pin-routing 28:20-22
  Plastic laminate 33:3
  Push jig for small strips 39:23; 40:17; 41:10-11
  Radial-arm router 20:3
  Radial-arm saw cut-off 22:3
  Raised panel 18:10-11; 20:3
  Resawing 6:9; 35:21
  Ripping 25:13
  Router-cut mortise 26:3
  Routing circles/rounds 25:3; 30:10-11; 40:8-9,11; 41:16
  Sharpening forstner bits 40:4-5,24
Jig, *cont.*
  Stopped router cuts 39:3
  Tambour gluing 17:4-5; 25:18
  Taper 1:6; 5:4; 11:3
  Tenon 16:18; 24:18-19; 28:3
  Wedged dowels 39:14,18,23
Joinery
  Angled half-lap 39:4
  Bare-faced dado 40:12
  Box 2:4-5; 17:12-13,19; 35:12-20; 42:6,10-20
  Box, rabbeted 17:19
  Corner, plywood 22:3; 33:20-22
  Dovetail 19:6-11; 22:4-9; 23:3; 32:23
  Dovetail key 31:4-11
  Dovetail tongue and groove 9:7; 20:22; 31:20-22; 38:16; 40:18
  Drop-leaf 11:10; 14:7-8
  Finger 17:14-15; 35:18-20
  Frame and panel 8:6,8-11; 18:10-11; 24:14-17; 29:22; 34:10-12; 36:4-10; 39:8-9; 41:7
  Full through dado 40:12
  Half-blind dovetail 22:4-9; 34:4-9
  Half-lap 27:22; 29:23; 39:4
  Half-lap, mitered 2:11
  Hand-cut dovetail 19:4-11; 22:4-5
  Haunched mortise and tenon 18:8-9
  Locked miter 9:10
  Machine-cut dovetail 22:6-9
  Miter and spline 7:11; 21:8-9; 30:9,22; 36:22; 37:23
  Mitered half-lap 2:11
  Mitered mortise and tenon 16:16-17
  Molded mortise and tenon 24:12-13,24
  Mortise and tenon 8:3-5; 13:10-11; 15:12; 16:16-17; 18:8-11,24; 22:18-22; 24:12-13,18-19; 25:22; 26:7-11; 37:13 38:12-13; 39:8-9
  Open mortise and tenon 24:18-22
  Open-spline miter 36:22; 39:15,19
  Parallel spline 9:9
  Rabbet and groove (also called rabbet/dado) 6:8; 10:9; 18:20-21
  Routed dovetail 22:6-9
  Rule 11:10; 14:7-8
  Sliding dovetail tongue and groove 20:20-21; 31:4-11
  Spline and groove 40:17
  Stave construction 25:8-9; 27:3; 30:23
  Stopped dado 36:12
  Stub tenon and groove 29:22; 31:4-9; 41:7
  Through dovetail 19:6-11
  Through mortise 38:12-13
  Tongue and dado 40:12-15; 41:6; 42:10-11,13
  Tongue and groove 29:22; 33:20-22; 38:8-9
  Twin tenon 12:12
  Wedged dowel 39:15,20
  Wedged mortise and tenon 15:8-12
Knock-down hardware 37:17,24; 38:18,24; 41:4-6,24
Latex stain 40:20-21
Legs
  Tapered 11:11; 14:5
  Turned 12:5
Leigh dovetail router jig 32:22,24
Linseed oil finish 30:12-15
Louvered doors 37:10-13
Machine-cut dovetail 22:6-9; 32:22
Marquetry, inlay 20:17; 26:6,22; 28:8-15,24
Micro Mesh 42:23,24
Mill marks 38:21-22
Minwax Wood Finish 40:19-22,24
Miter
  Compound 36:21
  Cutting 12:14; 21:8-9; 25:23; 30:9; 38:3
  Gauge, table saw 29:23
  Gluing 21:9; 30:9
  Jig 12:15; 24:12-13; 38:3
  Locked 9:10
  Mathematics 12:14-15
  Small stock 39:3
  22 degrees 41:3,10-11
Miter and spline joinery 7:11; 21:8-9; 30:9; 36:22
Mitered half-lap 2:11
Mitered mortise and tenon 16:16-17
Molded mortise and tenon 24:12-13
Moldings 26:22; 36:11; 37:7,24; 40:16
Mortise
  Cutting jig 16:18; 18:23; 26:9
  Drill press 18:23
  Hinge 32:23; 37:17; 42:6-7,12
  Plugs 38:15
  Router-cut, jig 26:3
  Slot 8:4; 10:3; 13:10-11; 26:8-9
  Mitered 16:16-18
  Through 15:12
  Twin 12:12
Mortise bits 26:20-21
Mortise and tenon
  Frame and panel 18:10-11; 26:7-11; 37:13; 39:8-9
  Haunched 8:3-5; 13:10-11; 18:8-9
  Molded edge 24:12-13
  Mitered 16:16-18
  Open 24:18-19
  Through 38:12-13
  Twin tenon 12:12
  Wedged 15:12
Muntins 13:8-9
Nailing fixture 15:3
Non-grain raising (NGR) stain 40:22,24
Octagon 12:8-9; 16:10; 21:4-7; 3:10-11
  Frame jig 21:17
Oil finishes 30:12-15; 32:7-9; 36:23
Oil, paraffin (rubbing) 42:22-23,24
Oil soluble dyes 40:21-22,24
Oil stains 40:20-22,23,24
Open-grained wood, filling 39:21-22
Open-spline miter 36:22; 39:15,19
Outdoor finishes 27:14-15
Palm sanders 14:12; 33:7
Panel cutting 8:12; 18:23; 22:11; 25:13
Panel raising bit 40:18,24
Paraffin oil 42:22-23,24
Parallel spline 9:9
Paste wax 42:23
Picture frame router bit 10:3; 36:24
Picture and glass mounting 11:3
Pigments 39:22,24; 40:20-22,23,24
Pin routing 28:10-11,16-18,20-22
Pipe clamps 15:3,7; 28:3; 36:3
Plane
  Adjustments 23:16-22; 25:23
  Bench 15:7; 23:16-22
  Flattening 23:22; 25:3; 29:23
  Jack 15:7; 23:16-17
  Sharpening 23:18-19
Planer, *Wagner* Safe-T- 10:10; 15:7
Planing
  Table top 23:21
  Thin stock 38:3
Plastic laminate 31:8-9; 33:3; 37:6,24; 39:14; 41:10,24
Plastic T-molding 37:7,24
Plug cutters 37:24
Plunge routers 28:23
Plywood
  Buying tips 30:23
  Corner joint 9:10; 22:3; 33:20-22
  Cutting 34:24
  Drawer construction 22:14-15
  Splintering 22:11
Portalign
  Drill guide 12:3,13
  Mounted on router table 38:3
Shaper bit 12:10-11
Pressmate drill press table elevator 16:20
Pumice 14:9; 42:23,24
Push jig for small strips 39:23; 40:17; 41:10-11
Putty, wood 38:21
Quarter-round stops 36:20
Rabbet router bit 36:21; 38:23
Rabbet and groove joint (also called rabbet/dado) 6:8; 10:9; 18:20-21
Rabbeted
  Dovetails 21:3
  Drawer front 18:20-21; 22:6-9
  Frame, routed 26:22; 30:9
Radial arm saw
  Cut-off jig 22:3
  Router jig 20:3
  Stand 32:3
  Table insert 20:3
  Techniques 15:16; 16:16-18; 18:11,23; 31:3; 38:3; 40:13
Raised-panel 2:10; 8:7; 18:10-11,23; 20:3; 23:23
Rasp 26:23
Repairs, gouges and scratches 38:21
Resawing 6:9; 28:4-7; 35:21; 40:6
Rip/bevel 16:8
Ripping jig 25:13
Rosan inserts 22:11; 24:3; 27:24; 28:24; 30:3; 38:14-15,17,24; 39:3; 42:15,24
Rottenstone 42:23,24
Routed
  Box sides 13:12-13; 28:10-11
  Dovetails 22:6-9; 32:22
Router
  Auxiliary base 35:3
  Bits 37:19-21,24
  Bit, gluing dovetail 31:24
  Bit, mortising 26:20-21
  Bit, picture frame 9:3; 10:3; 36:24
  Bit, rabbet 36:21; 38:23
  Bit, raised panel 23:23

Router, *cont.*
Buyer's guide 31:16-19
Chuck with drill press 12:3
Debris 24:23; 34:3
Direction 36:20-21
Dovetail fixtures 22:6-9; 23:3; 32:22,24
Guide bushing 37:11; 42:4-5,24
Guide, multi-purpose 17:20
Jig, centered grooves 30:22
Jig, dentil molding 29:3
Jig, lap dovetail 22:6-9
Jig, louvered door 37:10-13
Jig, *Leigh* dovetail 32:22,24
Jig, mortise cutting 26:3
Jig, radial arm saw 20:3
Jig, round blanks 25:3
Pin 28:20-22
Plunge 28:23
Stopped dado 40:12-13,14
Techniques 20:13; 21:8-11; 25:13; 26:22; 28:10-11,16-18,20-22; 30:4-11; 36:21; 37:22; 38:15; 40:8-9,11,12-13,14; 41:16; 42:4-5
Trammel attachment 21:10; 30:9; 40:8-9,11; 41:16
Universal base plate 42:24
Router table
Box joint jig 42:17,18
Cleaning up notches 40:3
Construction 20:18-19; 22:16-17; 31:3
Inserts 30:3
Jig for dowel making 19:3; 39:16-17; 42:3
Jig for stopped cuts 39:3
Mount on wheels 37:3
Pin-routing attachment 28:20-22
Routing circles/rings 25:3; 40:9
Sabre saw setup 30:3
Sanding drum attachment 38:3
Set-up for lattice pattern 41:14-15,17
Shims for adjustment 42:3
Table saw extension 24:3
Vacuum attachment 36:3
Rubbing compound 42:23,24
Rubbing finishes 14:9; 42:21-23,24
Rubbing oil 14:9; 42:21-23,24
Rule joint 11:10; 14:7-8
Rule, *Starrett* 34:23
Safety 15:3; 31:23; 34:3,23; 36:23; 38:23; 40:23
Safe-T-Planer, *Wagner* 10:10; 15:7
Sander
Belt 15:7; 33:3; 35:22
Drum 35:22; 38:3,6; 41:16-17
Palm 33:7; 34:3,22
Rockwell Sped Bloc 14:12; 33:7
Toy wheel jig 41:3
Sander stand, belt 10:10
Sanding
Block 39:3; 42:21
Circles 11:12
Disk 13:3; 15:3; 31:3
Dowels 9:12
Drum 13:3; 15:3; 25:3; 32:3; 38:3,6; 41:16-17
Dust masks 40:23
Glass 13:3
Safety 38:23
Surface preparation 38:22; 40:22
Table top 15:7
Wet 42:22-23
Sanding sealers 39:22,24
Sandpaper 33:4-6; 34:3; 38:22
Silicon carbide 33:4-6; 42:22-23,24
Zinc stearate 42:21-22,24
Saw, dovetail 19:5
Saw blade
Band 10:3
Dado blade 34:22
Table, carbide-tipped 27:16-21,24; 28:19,23
Cleaning 17:3; 21:23
Scraper, cabinet (hand) 14:12-13; 15:7; 39:11-13,24
Screws
Brass 18:3; 41:24
Sheet rock 18:3; 19:23
Sealers 14:9; 39:22,24; 40:22
Shaper
Bit 12:3,10-11
Guides 19:23
Sharpening
Aids 20:7; 31:3; 33:3; 39:11-13,24; 40:4-5,24
Burnisher 39:11-13,24
Carbide-tipped table saw blades 28:19
Chisels 20:8-11; 26:23
Diamond stones 24:7
Forstner bits 40:4-5,24
Japanese water stones 24:4-6; 26:23; 31:23
Plane irons 23:18-19
Router bits 37:21
Scraper blade 14:13; 39:12-13
Stones 20:4-7,12-13; 21:23; 39:11-13,24; 40:4-5,24
Table saw blades 28:19
Shelf, aligning brackets 11:3
Shooting board 13:3
Sliding dovetail tongue and groove 20:20-21; 31:4-11
Spalted wood 28:23
Spar varnish 39:24
Spindle turning 26:3
Spline
Cutting 10:3; 15:4-5; 21:8-9; 30:9
Parallel 9:9
Routed groove 21:8-9
Use 23:22; 32:14-15
Spline and groove joint 40:17
Spray Mount 35:22-23
Stains 40:19-22,24
Starrett rules 34:23
Stave construction 25:8-9,24; 27:3; 30:23
Steel wool 42:3,22-23,24
Sticker stains 34:22
Stones
Diamond 24:7
Japanese water 24:4-6; 26:23; 31:23
Sharpening 20:4-7,12-13; 21:23; 39:11-13,24; 40:4-5,24
Stopped dado 38:3; 40:12,15; 42:13
Stopped molding cuts 36:20-21
Stopped rabbets 36:21
Surface preparation for finishing 38:20-22,24; 40:22; 42:21
Sutherland Welles finishes 30:14-15,24; 32:7-9,24; 36:23; 39:24
Table saw
Bevels 23:3
Table saw, *cont.*
Blades, carbide-tipped 27:16-21,24; 28:19,23
Compound miters 36:21
Cove cutting jig 36:11; 37:23
Cutting plastic laminate 33:3
Cutting small strips 39:23; 40:17; 41:10-11
Dado blade, adjustable 17:20
Insert 35:23
Miter gauge 25:3
Setup 20:3; 42:3
Tack rags 38:21-22
Tambour techniques 4:6-8; 17:4-11; 20:3; 25:14-19
Taper
Bevel 16:10-11
Cutting 32:10-12
Jig 1:6; 5:4; 11:3
Tapered legs 11:11; 14:4-8; 28:12-13
Template
Back panel profile 40:17
Cardboard 39:4-5
Drilling 39:20
Masonite 38:4-5
Router, guide bushing 42:4-5
Router, louvered doors 37:10-12
Tenon
Cutting 18:10-11; 26:10-11
Haunched 18:8-9
Jig 24:18-19
Mitered shoulder 16:16-17
Repairing round 23:3
Staggered-shoulder 13:10-11
Stub 29:22; 31:4-9; 33:20
Twin 12:12
Threaded inserts 22:11; 24:3; 27:24; 28:24; 30:3; 38:14-15,17,24; 39:3; 42:15,24
Tongue and groove joint 9:7; 29:22; 31:12-15,20-22; 33:20-22; 38:8-9
Tongue and dado joint 40:12-15; 41:6; 42:10-11,13
Tool rest, grinder 20:7; 24:3
Toy wheel jig 41:3
Tung oil finish 30:12-15; 32:7-9,24; 36:23
Turning
Bowl 21:18-21; 25:24
Dowels on router table 19:3; 39:16-17
Gouges 21:22; 24:23
Legs 12:5
Scraper 21:22; 22:23
Spindle 26:3
Tools 21:18-22; 22:23; 24:23
Universal base plate (router) 42:24
Varnish
Spar 39:24
Tung oil 30:14; 39:24
Veneer 14:10-11; 33:18-19; 34:24; 40:6-7,24
Veneer tape 17:8; 22:11-14;
Vise
Dogs 28:3
Holding Jig 29:3
Wagner Safe-T-Planer 10:10; 15:7
Wall mounting system 4:12; 37:15,17,24; 40:18; 42:9,11
Warping (cupping) cabinet top 38:23
Wash coat 39:22
Water soluble dyes 40:21-22,24
Water stones, Japanese 24:4-6; 26:23; 31:23
Web frame construction 8:8-11; 22:18; 29:4-21; 31:4-9
Wedge clamps 5:3
Wedged dowel joint 39:15-20
Wheels, toy 35:24; 41:3,24
Wood
Dimensions 22:23; 37:22
Information 36:24
Movement 9:7; 31:23; 38:8,23; 39:15; 40:23
Open-grained/closed-grain 39:21:22
Outdoor use 3:11; 27:14-15
Putty 38:21,24
Sample kits 34:23; 37:22
Spalted 28:23
Storage 19:23; 30:3
Wooden hinges 9:5-11
Woodworking clubs
Lists (issues 27-33,35-38,40:pg. 24)
Organizational help 37:24

PROJECT INDEX

Antique wall mirror 26:18-19,24
Art center, child's 41:4-9,24
Bachelor's chest 34:4-9
Barrister's bookcase 29:16-21,24
Bathroom cabinet 37:14-15, 24
Bed
Bunk 38:18-19,24
Headboard 34:10-12
Single 38:12-17,24
Bedroom furniture 34:4-21; 38:12-19
Bed-side stand 18:4-7; 34:16
Belt buckle 10:6
Bench
Garden 3:8-9; 27:12-13
Trestle 23:24
Binder, wooden looseleaf 7:4
Blanket chest 16:12-15; 32:16-21,24; 36:23
Bookcase 7:6-7; 29:16-21,24
Bookrack 7:12
Bow saw 5:5
Bowl, turned
Laminated 21:18-21
Stave construction 25:24
Box
Bread 4:6-8
Display 9:11
End grain top 15:13
In/out 31:10-11
Jewelry 9:5; 24:20-22
Music 6:6-7; 28:4-7,24
Recipe 10:8
Routed 13:12-13; 28:10-11
Roll-top bread 4:6-8
Shop storage 15:14-15
Tissue 2:5; 19:24
Toy 29:4-9,24
Bread board 20:24
Bread box, roll-top 4:6-8
Buckle, belt 10:6
Buffet table, gate-leg 20:14-17
Bunk bed 38:18-19,24
Butler's tray table 14:10-11,16; 16:3
Cabinet
Barrister's bookcase 29:16-21,24
Bathroom 37:14-15,24
Bed-side stand 18:4-7

Cabinet, *cont.*
Book/magazine 7:6-7
Caddy, two-drawer 31:12-15
Caned-panel cabinet and hutch 22:18-22
Chair-side 24:14-17
Colonial dry sink 18:12-15
Colonial wall hutch 18:16-19
Contemporary hutch 13:4-7
Curio 21:12-15; 26:12-17,24
European cabinet and hutch 22:18-22
File 7:8-9; 29:10-15
Frame and panel 8:8-11
Icebox 36:4-10
Modular storage system 22:12-15
Modular wall unit 33:8-17
Night stand 34:16-19
Raised-panel door 8:7
Shop storage 25:4-7; 42:10-15,18-19,24
Spool 26:4-6
Tambour stereo 17:6-9
Tambour TV 25:14-19
Tambour wall 17:10-11
Tool 42:10-15,18-19,24
TV/VCR 25:14-19; 38:8-11,24
Wall cupboard 40:14-18,24
Camp stool 3:7
Candle stand table 11:6-7
Caned-panel cabinet and hutch 22:18-22
Canister, turned 14:14-15; 25:8-12; 27:3; 30:23
Car, toy race 5:12
Card holder 35:18-20,24
Cart, microwave/serving 23:8-11
Chair
Contemporary 2:6-8
Deck 3:6-7
Oak 15:8-11
Patio 27:8-11
Seat 25:23
Chair-side cabinet 24:14-17
Chalk tray 41:8
Chest
Bachelor's 34:4-9
Blanket 16:12-15; 32:16-21,24; 36:23; 38:23
Six-drawer (box joint drawers) 17:16-19
Sweater 9:8-9
Toy 29:4-9,24
Cheval mirror 30:4-8,24
China
Wall hutch 18:16-19
Wall shelf 40:14-18,24
Chisel case 24:20-22
Christmas ornaments 6:10-12
Circular mirror frame 12:10-11
Circular table 30:16-21,24
Clock
Desk 10:4; 33:18-19,24; 41:10-13,24
Mantel 24:8-11; 30:23
Octagonal wall 12:8-9
Regulator 36:12-15,24
Round wall 30:10-11
Schoolhouse 21:4-7; 30:23
Coffee grinder 35:16-17,24
Coffee table 19:14-17; 25:20-22
Coin sorter
Columns 16:9
Tray 10:6
Colonial
Dry sink 18:12-15
Wall hutch 18:16-19
Cookbook/recipe shelf 6:4-5
Cooling rack 1:2
Cradle, doll 38:4-7,24
Cupboard, wall 40:14-18,24
Curio cabinet 21:12-15; 26:12-17,24
Cutting board 1:1; 32:10-12,24; 20:24
Deck
Chair 3:6-7
Squares 3:10
Desk
Adjustable 31:4-9
Child's drop-front 41:4-9,24
Lap 9:6
Shaker-style writing 12:4-7
Dining table
Circular with leaf 30:16-21,24
Contemporary oak 15:4-5
Drop-leaf 11:8-10
Picnic 27:4-7
Trestle 1:3-5; 23:12-15
Display case 26:4-6,24; 26:12-17
Display case, wall 9:11
Doll cradle 38:4-7,24
Drop leaf
Pembroke table 14:4-8
Table 11:8-10
Easel/desk, child's 41:4-9,24
End grain box 15:13
English wall lantern 36:16-19,24; 40:3
File cabinet 7:8-9; 29:10-15
File caddy, two drawer 31:12-15
Frame
Circular 12:10-11; 30:10-11
Oval 5:9
Gallery clock 30:10-11
Gate-leg buffet table 20:14-17
Glass-top table 40:10-11
Glider, yard 39:8-10,24
Goblets, turned 23:4-7; 24:23
Hall mirror 21:16
Headboard 34:10-12
Hutch
Contemporary 13:4-7
Caned-panel cabinet and hutch 22:18-22
Icebox 36:4-10
In/out box 31:10-11
Jewelry box 9:5; 24:20-22
Knife holder 10:7
Lamp
Dovetail 22:24
Hanging 2:9
Lantern, English wall 36:16-19,24
Lazy Susan 21:10-11
Letter opener 10:7
Light bracket, swivel 9:4
Mantel clock 24:8-11; 30:23
Marking gauge 19:12-13; 21:3
Memo board 18:24; 41:9,24
Microwave/serving cart 23:8-11
Mirror
Antique wall 26:18-19,24
Cheval 30:4-8,24
Circular frame 12:10-11
Hall 21:16
Vanity 10:5; 24:24
Wall 34:20-21
Modular storage system 22:12-15
Modular wall unit 33:8-17,24
Music box 6:6-7; 28:4-7,24
Nestled tables 28:12-15
Night stand 34:16-19
Note board 18:24; 41:9,24
Ornaments, Christmas 6:10-12
Outdoor furniture 3:3-12; 27:4-13
Patio chair 27:8-11
Pembroke table 14:4-8
Pencil and card holder 2:12
Phone, old-fashioned wall 42:4-9,24
Picnic table 27:4-7
Pin-up board 18:24; 41:9,24
Planter
Cedar pillars 3:4
Hanging 3:12
Redwood tub 3:3
Stand 40:10-11,24
Tapered-sides 16:10-11
Popcorn bowl, turned 25:24
Porch swing 39:4-7,24
Quilt rack 32:4-6
Recipe box 10:8
Regulator clock 36:12-15
Roll-top bread box 4:6-8
Round trivet 41:14-16
Routed
Snack tray 28:16-18
Trivets 41:14-17
Router case 4:3
Router table 5:6-8; 20:18-19; 22:16-17
Router table stand 22:16-17
Schoolhouse clock 21:4-7; 30:23
Sconce, candle 6:5
Scrap wood projects 3:12; 10:4-8; 14:14-15
Serving
Cart 23:8-11
Tray 19:19; 39:14-15
Shaker-style
Peg rack 2:3
Step stand 19:20-22
Table 11:4-9
Writing desk 12:4-7
Shelf, wall 20:20-21; 37:16-18,24; 40:14-18,24
Shop storage
Box 15:14-15
Cabinet 25:4-7; 42:10-15,18-19,24
Cart 13:14-15
Side table 11:4-5
Snack tray, routed 28:16-18
Spice box 6:3
Spool display case 26:4-6
Spoon display case 9:11
Square trivet 41:17
Stand
Planter 40:10-11,24
TV/VCR 38:8-11,24
TV trays 16:7; 37:8-9
Umbrella 40:6-9,24
Stereo cabinet, tambour 17:6-9
Stool
Camp 3:7
Child's 35:12-13
Shop 4:11
Storage
Modular system 22:12-15
Modular wall unit 33:8-17
Shop 15:14-15; 25:4-7; 42:10-15,18-19,24
Table saw 13:14-15
Sweater chest 9:8-9
Swing, porch 39:4-7,24
Table
Butler's tray 14:10-11,16
Candle stand 11:6-7
Coffee 1:7; 19:14-17; 25:20-22
Contemporary oak 15:4-5
Dining 11:8; 15:4; 20:14; 23:12; 30:16-21,24
Drop-leaf 11:8-10; 14:4-8
Gate-leg buffet 20:14-17
Glass-top 40:10-11,24
Kitchen 15:4-5
Leaf 30:18-19
Nestled 28:12-15
Picnic 27:4-7
Pembroke 14:4-8
Shaker-style side 11:4-5
Trestle 1:3-5; 23:12-15
TV tray 16:4-7; 37:4-7,24
Tambour
Cylinder 40:7,10
Roll-top bread box 4:6-8
Stereo cabinet 17:6-9
TV cabinet 25:14-19
Wall cabinet 17:10-11
Tie rack 1:2
Tissue box 2:5; 19:24
Tool storage 4:9,12; 42:10-15,18-19,24
Toy
Bank truck 41:18-23,24
Biplane 35:8-11,24
Chest 29:4-9,24
Race car 5:12
Train 5:10-11
Truck 35:4-7,24
Tray
Routed snack 28:16-18
Serving 19:19; 39;14-15
Snack 28:16-18
TV, tables 16:4-7; 17:20; 37:4-7,24
Tray carrier 39:18-20
Trestle
Bench 23:24
Desk 31:4-9
Table 1:3-5; 23:12-15
Trivet
Round 41:14-16
Square 41:17
Tiled 21:24; 22:23
Turning
Canister 14:14-15; 25:8-12; 30:23
Fruit bowl 21:18-21
Goblets 23:4-7; 24:23
Popcorn bowl 25:24
TV cabinet 25:14-19; 38:8-11,24
TV tray stand 16:7; 37:8-9
TV tray tables 16:4-7; 17:20; 37:4-7,24
Umbrella stand 40:6-9,24
Vanity mirror 24:24
Video cassette recorder (VCR) cabinet 25:14-19; 38:8-11,24
Wall
Cabinet 17:10-11
Cupboard 40:14-18,24
Lantern, English 36:16-19,24; 40:3
Mirror 21:16; 26:18-19,24; 34:20-21
Shelf 20:20-21; 37:16-18,24; 40:14-18,24
Unit 33:8-17,24
Wastebasket 7:5; 40:10-11,24
Yard glider 39:8-10,24